Bulletin No
O03EE0
(Apr, 2010)

SanKen

SEMICONDUCTORS GENERAL CATALOG

ICS TRANSISTORS THYRISTORS DIODES

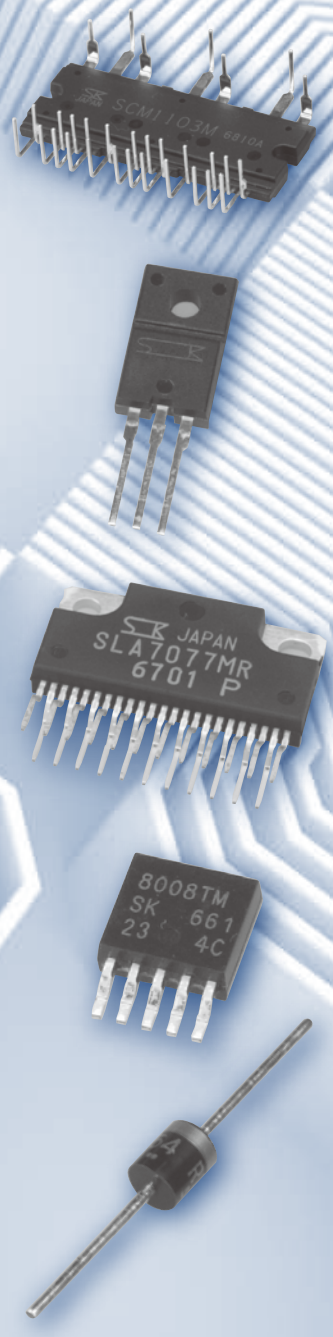

SANKEN ELECTRIC CO., LTD.

http://www.sanken-ele.co.jp/en/

⚠ Warning

- The contents in this document are subject to changes, for improvement and other purposes, without notice.
- Be sure to check the delivery specifications before using these products.
- The operation and circuit examples in this document are provided for reference purposes only. Sanken assumes no liability for violation of industrial property, intellectual property, or other rights of Sanken or third parties, that stem from these examples.
- The user must take responsibility for considering and determining which objects the products in this document are used with.
- Although we will continue to improve the quality and reliability of our products, semiconductor products, by their nature, have certain fault and failure rates. The user must take responsibility for designing and checking to secure the device and system so that a part failure may not lead to human injury, fire, damages, or other losses.
- The products in this document are intended for normal electronic devices (such as home appliances, office equipment, communication terminals, or measurement devices).
  If you are considering using our products for a device that requires high reliability (such as transport machines and their control units, traffic light control systems, disaster prevention, and security equipment or any kind of safety equipment), make sure that you consult our sales representative.
  Do not use these products for devices that require extremely high reliability (such as aerospace instruments, nuclear power control units, or life support systems).
- The products in this document are not designed to be radiation-proof.
- The contents in this document must not be transcribed or copied without our written consent.

SANKEN SEMICONDUCTORS

CONTENTS

1

ICs

Ordering Information

All products listed must be ordered in standard packing increments.

Series Name/ Product Name	Package	Standard Packing Quantities	
		Bulk	Taping
PG001M	DIP16	1000	–
SAI	PS4(Surface-mount)	–	2000
SCM1100M	SCM	250	–
SI-3000KD	TO263-5(Surface-mount)	–	800
SI-3000KF	TO220F-5	2000	–
SI-3000KM	TO252-5(Surface-mount)	–	3000
SI-3000KS	SOP8(Surface-mount)	–	1000
SI-3000KWM	TO252-5(Surface-mount)	–	3000
SI-3000LLSL	SOP8(Surface-mount)	–	1000
SI-3000LSA	SOP8(Surface-mount)	–	1000
SI-3000LU	SOT89-5(Surface-mount)	–	1000
SI-3000ZD	TO263-5(Surface-mount)	–	800
SI-3000ZF	TO220F-5	2000	–
SI-7321M	HSOP44(Surface-mount)	–	2000
SI-7510	DIP30	680	–
SI-8000E	TO220F-5	2000	–
SI-8000FD	TO263-5(Surface-mount)	–	800
SI-8000FFE	TO220F-5	2000	–
SI-8000GL	DIP8	2500	–
SI-8000HD	TO263-5(Surface-mount)	–	800
SI-8000HFE	TO220F-5	2000	–
SI-8000JD	TO263-5(Surface-mount)	–	800
SI-8000JF	TO220F-5	2000	–
SI-8000Q	HSOP8(Surface-mount)	–	1000
SI-8000S	TO220F-5	2000	–
SI-8000SD	TO263-5(Surface-mount)	–	800
SI-8000TFE	TO220F-5	2000	–
SI-8000TM	TO252-5(Surface-mount)	–	3000
SI-8000W	SOP8(Surface-mount)	–	1000
SI-8000Y	TO220F-7	2000	–
SI-8011NVS	TSSOP24	–	2800
SI-8100QL	DIP8	2500	–
SI-8205NHD	HSOP8	–	1000
SI-8400L	Non–package type (EI-12.5 core)	864	–
SI-8405NH	SOP8(Surface-mount)	–	1000
SI-8405NL	SOP8(Surface-mount)	–	1000
SI-8500L	Non–package type (EI-19 core)	320	–
SI-8511NVS	TSSOP24	–	2800

Series Name/ Product Name	Package	Standard Packing Quantities	
		Bulk	Taping
SLA6805MP	SLA23Pin	LF.No.2151/2152:648	–
SLA6845M	SLA24Pin	LF.No.2171:648	–
SLA6868M/ SLA682xM	SLA24Pin	LF.No.2171:648 LF.No.2175:540	–
SLA7022MU/ 7029M	ZIP15 with Fin (SLA15Pin)	1080	–
SLA7024M/ 7026M/7027MU	ZIP18 with Fin (SLA18Pin)	1080	–
SLA703xM	ZIP18 with Fin (SLA18Pin)	1080	–
SLA7042M/7044M	ZIP18 with Fin (SLA18Pin)	1080	–
SLA705xM	ZIP18 with Fin (SLA18Pin)	1080	–
SLA706xM	ZIP21 with Fin (SLA21Pin)	1080	–
SLA707xMR/MPR	ZIP23 with Fin (SLA23Pin)	1080	–
SLA708xMR/MPR	ZIP23 with Fin (SLA23Pin)	1080	–
SLA7611M	ZIP18 with Fin (SLA18Pin)	1080	–
SMA682xMP	SMA24Pin	LF.No.2451:1080 LF.No.2452:1008	–
SMA686xM	SMA24Pin	LF.No.2451:1080 LF.No.2452:1008	–
SMA7022MU/ 7029M	ZIP15 (SMA15Pin)	1440	–
SMA7036M	ZIP15(SMA15Pin)	1440	–
SPI-6631M	HSOP16		
SPI-721xM	HSOP16	–	1400
SPI-8000A	HSOP16	–	1400
SPI-8000TW	HSOP16	–	1400
STA6940M	ZIP18(STA18Pin)	LF.No434:1785	–
STA801M	SIP10(STA10Pin)	100	–
STA810M	SIP8(STA8Pin)	100	–
STA820M	SIP8(STA8Pin)	100	–
SX68000M	SOP27	–	1000

Selection Guide

Linear Regulator ICs (low dropout voltage, built-in overcurrent, thermal protection circuits)

Surface-Mount Type

Series Name	Output Current	Output Voltage						Variable (Reference Voltage)				Package				Page
		(V)						(V)					Low Current Consumption During OFF	Output ON/OFF	Overcurrent Protection Characteristic	
	(A)	1.8	2.5	3.3	5	9	12	1.0	1.1	1.25	1.28					
SI-3000LU	0.25									◎		SOT89-5	○	○	Drooping	10
SI-3000LSA	1.0	◎	◎	◎	◎							SOP8	○	○	Foldback	12
SI-3000KS	1.0		◎	◎							◎	SOP8	○	○	Drooping	14
SI-3000KM	1.0		◎	◎	◎	◎	◎	◎			◎	TO252-5	○	○	Foldback*1	16
SI-3000KD	1.0			◎	◎			◎			◎	TO263-5	○	○	Foldback*2	20
SI-3000LLSL	1.5							◎				SOP8	○	○	Foldback	24
SI-3000ZD	3.0			◎					◎			TO263-5	○	○	Foldback	26

*1: Drooping for SI-3012KM/3025KM/3033KM
*2: Drooping for SI-3012KD/3033KD

Thru-Hole Type

Series Name	Output Current	Variable (Reference Voltage)		Package				Page
		(V)			Low Current Consumption During OFF	Output ON/OFF	Overcurrent Protection Characteristic	
	(A)	1.0	1.1					
SI-3000KF	1.0	◎		TO220F-5	○	○	Foldback	28
SI-3000ZF	3.0		◎	TO220F-5	○	○	Foldback	30

Switching Mode Regulator ICs (built-in overcurrent, thermal protection circuits)

Surface-Mount Type

Series Name	Output Current (A)	Output Voltage (V) 3.3	5	9	12	Variable (Reference Voltage) (V) 0.5	0.8	1.0	Maximum Input Voltage (V)	Package	Low Current Consumption During OFF	Output ON/OFF	Overcurrent Protection Characteristic	Page
SAI	0.4				◎				35	PS4	–	–	Drooping	34
	0.5	◎	◎											
SI-8000W	0.6	◎	◎						35	SOP8	–	–	Drooping	36
SI-8000JD	1.5	◎	◎	◎	◎				43	TO263-5	○	○	Foldback	38
SI-8000TM	1.5						◎		43	TO252-5	○	○	Drooping	40
SI-8000SD	3.0	◎	◎						43	TO263-5	–	○	Drooping	42
SPI-8000A	3.0							◎	53	HSOP16	○	○	Foldback	44
SI-8000Q*	3.5					◎			30	HSOP8	○	○	Drooping	48
SI-8000FDE	3.5						◎		43	TO263-5	–	○	Drooping	50
SI-8000FDL	3.5						◎		43	TO263-5	○	○	Drooping	50
SI-8000HD	5.5						◎		43	TO263-5	○	○	Drooping	52

*:Current Mode Control

Thru-Hole Type

Series Name	Output Current (A)	Output Voltage (V) 3.3	5	9	12	15	Variable (Reference Voltage) (V) 0.5	0.8	1.0	1.5	Maximum Input Voltage (V)	Package	Low Current Consumption During OFF	Output ON/OFF	Overcurrent Protection Characteristic	Page
SI-8000E	0.6		◎								43	TO220F-5	–	–	Drooping	54
SI-8000JF	1.5	◎	◎		◎					◎	43	TO220F-5	○	○	Foldback	56
SI-8000TFE	1.5		◎					◎			43	TO220F-5	○	○	Drooping	58
SI-8000GL	1.5								◎		53	DIP8	○	○	Foldback	60
SI-8000S	3.0	◎	◎	◎	◎	◎					43*1	TO220F-5	–	○	Drooping	62
SI-8100QL*2	3.5						◎				30	DIP8	○	○	Drooping	64
SI-8000FFE	3.5							◎			43	TO220F-5	–	○	Drooping	66
SI-8000HFE	5.5		◎					◎			43	TO220F-5	○	○	Drooping	68
SI-8100Y*2	8.0		◎						◎		45	TO220F-7	○	○	Drooping	70

*1: 35V for SI-8033S
*2:Current Mode Control

Surface-Mount, Synchronous Rectifier Type

Series Name	Oscillation Frequency (A)	Variable (Reference Voltage) (V) 0.5	1.1	Maximum Input Voltage (V)	Package	Low Current Consumption During OFF	Output ON/OFF	Overcurrent Protection Characteristic	Page
SI-8011NVS	–		◎	25	TSSOP24	–	○	Foldback	72
SI-8405NL	–	◎		6	SOP8	–	○	Drooping	74
SI-8511NVS	–		◎	25	TSSOP24	–	○	Drooping	76
SI-8405NH	–	◎		6	SOP8	–	○	Drooping	78
SI-8205NHD	3.0	◎		46	HSOP8	○	○	Drooping	80

Flywheel Diode (Schottky-Barrier Diode) Built-in Type

Series Name	Output Current (A)	Output Voltage (V) 5	6.5	Maximum Input Voltage (V)	Package	Low Current Consumption During OFF	Output ON/OFF	Overcurrent Protection Characteristic	Page
STA810M	1.5		◎	43	SIP8 (STA8Pin)	○	○	Foldback	82
STA820M	3.0	◎		31	SIP8 (STA8Pin)	–	○	Drooping	84

L-Combined Type

Series Name	Output Current (A)	Output Voltage (V) 5	Maximum Input Voltage (V)	Package	Low Current Consumption During OFF	Output ON/OFF	Overcurrent Protection Characteristic	Page
SI-8400L	0.5	◎	35	Non-package type (EI-12.5 core)	–	–	Drooping	86
SI-8500L	1.0	◎	35	Non-package type (EI-19 core)	–	○	Drooping	86

Multi Output Type Regulator ICs

2-Output Type

Series Name		Output Voltage (V)	Output Current (A)	Package	Regulator Type	Functions: Overcurrent Protection	Functions: Thermal Protection	Functions: ON/OFF Control	Low Current Consumption During OFF	Remarks	Page
STA801M	ch1	5.0	0.5	SIP10 (STA10Pin)	Step-down switching type	Drooping	○	○	–	Built i-in flywheel diode (Schottky-barrier diode)	90
	ch2	Select from 9, 11.5, 12.1 and 15.5	0.5		Step-down switching type	Drooping	○	○	–	Built i-in flywheel diode (Schottky-barrier diode)	
SPI-8001TW	ch1	Variable(1.0-16V)	1.5	HSOP16	Step-down switching type	Foldback	○	○	○		92
	ch2	Variable(1.0-16V)	1.5			Foldback	○	○			
SPI-8002TW	ch1	Variable(1.0-24V)	1.5	HSOP16	Step-down switching type	Foldback	○	○	○		92
	ch2	Variable(1.0-24V)	1.5			Foldback	○	○			
SPI-8003TW	ch1	Variable(1.0-24V)	1.5	HSOP16	Step-down switching type	Foldback	○	○	○	Frequency Variable	92
	ch2	Variable(1.0-24V)	1.5			Foldback	○	○			
SI-3002KWM	ch1	3.3	1.0	TO252-5	Linear type	Foldback	○	○	–		96
	ch2	2.5	1.0			Foldback	○	○			

Application Note

■ Heat dissipation and Reliability

The reliability of an IC is highly dependent on its operating temperature. Please be sure to apply silicone grease to the IC and to mount it to the heatsink with a proper mounting torque.
Heatsink design should pay particular attention to ensuring sufficient heat dissipation capacity.
In addition, please take into account the air convection in operation.

■ Calculating Internal Power Dissipation(P_D)

P_D is given by the following formula:
$P_D = I_O \cdot [V_{IN(mean)} - V_O]$
Determine the size of the heatsink according to the relationship between allowable power dissipation and ambient temperature.

■ Setting DC Input Voltage

The following is the waveform of a DC input voltage.

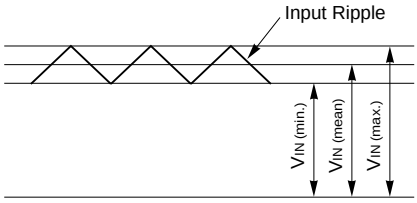

When setting the DC input voltage, please follow the instructions below:
●Make $V_{IN(min)} \geq$ [(Output voltage) + (Minimum dropout voltage)]
●Make $V_{IN(max)} \leq$ DC input voltage shown in the "Absolute Maximum Ratings"

■ Thermal Design

The maximum junction temperature $T_{j(max)}$ given in the absolute maximum ratings is specific to each product type and must be strictly observed. Thus, thermal design must consider the maximum power dissipation $P_{D(max)}$, which varies by the conditions of use, and the maximum ambient temperature $T_{a(max)}$.
To simplify thermal design, T_a-P_D characteristic graphs are provided herein.
Please observe the following steps for heatsink design:
1. Obtain the maximum ambient temperature $T_{a(max)}$.
2. Obtain the maximum power dissipation $P_{D(max)}$.
3. Look for the intersection point on the T_a-P_D characteristic graph and determine the size of the heatsink.

Although the heatsink size is now obtained, in actual applications, 10-to-20% derating factor is generally introduced. Moreover, the heat dissipation capacity of a heatsink highly depends on how it is mounted. Thus, it is recommended to measure the heatsink and case temperature in the actual operating environment.
Please refer to the T_a-P_D characteristic graphs for respective product types.

■ Mounting Torque

SI-3000KF
SI-3000ZF
] 0.588 to 0.686 [N•m] (6.0 to 7.0 [kgf•cm])

■ Recommended Silicone Grease

• Shin-Etsu Chemical Co., Ltd.: G746
• Momentive Performance Materials Inc.: YG-6260
• Dow Corning Toray Silicones Co., Ltd.: SC102
Please select proper silicone grease carefully since the oil in some grease products may penetrate the device and result in an extremely short device life.

■ Others

• Devices can not be operated in parallel connection aiming for a larger current.
• Diodes for isolation purpose are provided in between input and ground, and also in between output and ground. They may be broken down if the device is reverse biased. In this case, please clamp the device with low V_F diodes to protect them.

■ Rectifier Diodes for Power Supplies

To rectify the AC input voltage using rectifier diodes for power supplies, please use SANKEN rectifier diodes shown in the following list. (Please use a center-tap or bridge configuration in using stand-alone type diodes.)

Series Name	Diodes
SI-3000LU Series	SJPM-H4(Surface-Mount Stand-Alone Type,V_{RM}:400V, I_O:2.0A)
SI-3000LSA Series	
SI-3000KS Series	
SI-3000KM Series	
SI-3000KD Series	
SI-3000LLSL Series	
SI-3000ZD Series	
SI-3000KF Series	AM01Z(Axial Type, V_{RM}:200V, I_O:1.0A)
SI-3000ZF Series	RM10Z(Axial Type, V_{RM}:200V, I_O:1.5A)

SI-3000LU Series Surface-Mount, Low Current Consumption, Low Dropout Voltage Linear Regulator ICs

■Features

- Compact surface-mount package (SOT89-5)
- Output current: 250 mA
- Low current consumption Iq (OFF) ≤ 1μA (V_C = 0 V)
- Low dropout voltage: V_{DIF} ≤ 0.5 V (at I_O = 250 mA)
- Output voltage range (1.5V to 15V)
- Built-in drooping-type-overcurrent and thermal protection circuits

■Absolute Maximum Ratings

(T_a=25°C)

Parameter	Symbol	Ratings	Unit
DC Input Voltage	V_{IN}	18	V
Output control terminal voltage	V_C	V_{IN}	V
DC Output Current	I_O	250	mA
Power Dissipation	P_D*1	0.75	W
Junction Temperature	T_j*2	–40 to +135	°C
Storage Temperature	T_{stg}*2	–40 to +125	°C
Thermal Resistance (Junction to Ambient Air)	$\theta_{j\text{-}a}$*1	146	°C/W

*1: When mounted on glass-epoxy board 40 × 40 mm (copper laminate area 2%).
*2: Thermal protection circuits may operate if the junction temperature exceeds 135°C.

■Applications

- Auxiliary power supplies for PC
- Battery-driven electronic equipment

■Recommended Operating Conditions

Parameter	Symbol	Ratings		Unit
		min.	max.	
Input Voltage	V_{IN}	*2, *3	V_O+2*1	V
DC Output Current	I_O	0	250	mA
Operating Ambient Temperature	T_{op}	–20	85	°C

*1: V_{IN} (max) and I_O (max) are restricted by the relation P_D = (V_{IN} - V_O) × I_O.
Calculate these values referring to the reference data on page 11.
*2: Refer to the Dropout Voltage parameter.
*3: For the SI-3012LU, set the input voltage to Vin ≥ 2.4 V, and secure the minimum voltage as explained in "Setting DC Input Voltage" section in Linear Regulator Application Note.

■Electrical Characteristics

(T_a=25°C, V_C=2V unless otherwise specified)

Parameter	Symbol	Ratings SI-3012LU(Variable) min.	typ.	max.	Unit
Reference Voltage	V_{ADJ}	1.210	1.250	1.290	V
	Conditions	V_{IN}=V_O+1V, I_O=10mA			
Dropout Voltage	V_{DIF}			0.3	V
	Conditions	I_O=100mA(V_O=3.3V)			
				0.5	
	Conditions	I_O=250mA(V_O=3.3V)			
Line Regulation	ΔV_{LINE}			10	mV
	Conditions	V_{IN}=V_O+1 to V_O+5V, I_O=10mA(V_O=3.3V)			
Load Regulation	ΔV_{LOAD}			20	mV
	Conditions	V_{IN}=V_O+1V, I_O=1 to 250mA(V_O=3.3V)			
Temperature Coefficient of Reference Voltage	$\Delta V_O/\Delta T_a$		±0.3		mV/°C
	Conditions	T_j=0 to 100°C			
Ripple Rejection	R_{REJ}		55		dB
	Conditions	V_{IN}=V_O+1V, f=100 to 120Hz(V_O=3.3V)			
Quiescent Circuit Current	I_q			150	μA
	Conditions	V_{IN}=V_O+1V, I_O=0mA V_C=2V, R2=100kΩ			
Circuit Current at Output OFF	I_q(OFF)			1	μA
	Conditions	V_{IN}=V_O+1V, V_C=0V			
Overcurrent Protection Starting Current*1	I_{S1}	260			mA
	Conditions	V_{IN}=V_O +1V			
V_C Terminal: Control Voltage (Output ON)*2	V_C, IH	2.0			V
V_C Terminal: Control Voltage (Output OFF)*2	V_C, IL			0.8	V
V_C Terminal: Control Current (Output ON)	I_C, IH			40	μA
	Conditions	V_C=2V			
V_C Terminal: Control Current (Output OFF)	I_C, IL		0	–5	μA
	Conditions	V_C=0V			

*1: I_{S1} is specified at the 5% drop point of output voltage V_O on the condition that V_{IN} = 3.3 V, and I_O = 10 mA.
*2: Output is OFF when the output control terminal (V_C terminal) is open. Each input level is equivalent to LS-TTL level. Therefore, the device can be driven directly by LS-TTLs.

■External Dimensions (SOT89-5)

(Unit : mm)

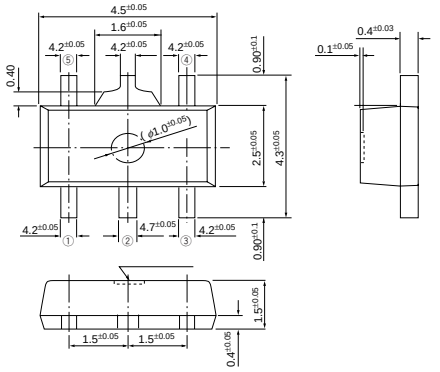

Pin Assignment
① ADJ
② GND
③ V_C
④ V_{IN}
⑤ V_O

Plastic Mold Package Type
Flammability: UL94V-0
Product Mass: Approx. 0.05g

■Block Diagram

SI-3012LU

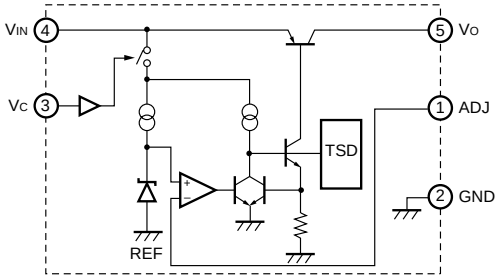

■Standard External Circuit

SI-3012LU

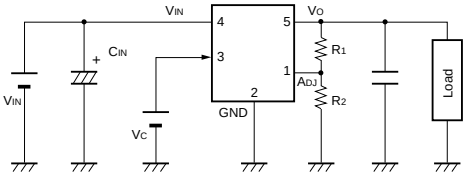

C_O: Output capacitor (10 μF or larger)
For SI-3000LU series, Co has to be a low ESR capacitor such as a ceramic capacitor.
C_{IN}: Input capacitor (10 μF approx.)
● Setting of SI-3012LU output voltage (recommended voltage: 1.5 V to 15 V)
R1 and R2: Resistors for output setting
The output voltage can be set by connecting R1 and R2 as shown in the diagram on the left.
R2: 100 kΩ is recommended
$R1=(V_O-V_{ADJ})/(V_{ADJ}/R2)$

■Reference Data

Copper Laminate Area vs Power Dissipation
T_j=100°C PCB size 40×40

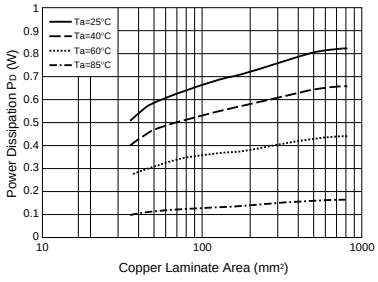

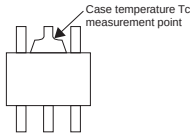

- A monolithic ICs mounts an inner frame stage that is connected to the GND pin (pin 2). Therefore, enlarging the copper laminate area connected to the GND pin improves heat radiation effect.
- Obtaining the junction temperature
  Measure the temperature T_C at the lead part of the GND pin (pin 2) with a thermocouple, etc. Then, substitute this value in the following formula to obtain the junction temperature.

$$T_j=P_D\times\theta j\text{–}c+T_c \quad (\theta j\text{–}c=5°C/W)$$

SI-3000LSA Series Surface-Mount, Low Current Consumption, Low Dropout Voltage Linear Regulator ICs

■Features

- Compact surface-mount package (SOP8)
- Output current: 1 A
- Low circuit current at output OFF: Iq(OFF) ≤ 1 μA (V_C = 0 V)
- Low dropout voltage: V_{DIF}≤0.8 V (at I_O = 1 A)
  V_{DIF} ≤1.2 V (I_O = 1 A) for SI-3018LSA
- 4 types of output voltages (1.8 V, 2.5 V, 3.3 V, 5.0 V) available
- Output ON/OFF control terminal voltage compatible with LS-TTL
- Built-in foldback-type-overcurrent and thermal protection circuits

■Absolute Maximum Ratings

(T_a=25°C)

Parameter	Symbol	Ratings	Unit
DC Input Voltage	V_{IN}	16	V
Output control terminal voltage	V_C	V_{IN}	V
DC Output Current	I_O	1	A
Power Dissipation	P_{D1}*1	1.16	W
	P_{D2}*2	1.1	W
Junction Temperature	T_j*3	–30 to +150	°C
Operating Ambient Temperature	T_{op}	–30 to +150	°C
Storage Temperature	T_{stg}	–30 to +150	°C
Thermal Resistance (Junction to Lead (pin 8))	$\theta_{j\text{-}L}$	36	°C/W
Thermal Resistance (Junction to Ambient Air)	$\theta_{j\text{-}a}$*2	100	°C/W

*1: When mounted on glass-epoxy board 56.5 × 56.5 mm (copper laminate area 100%).
*2: When mounted on glass-epoxy board 40 × 40 mm (copper laminate area 100%).
*3: Thermal protection circuits may be activated if the junction temperature exceeds 135°C.

■Applications

- Auxiliary power supplies for PC
- Battery-driven electronic equipment

■Recommended Operating Conditions

Parameter	Symbol	Ratings				Unit
		SI-3018LSA	SI-3025LSA	SI-3033LSA	SI-3050LSA	
DC Input Voltage Range	V_{IN}	3.1 to 3.5*1	*2 to 3.5*1	*2 to 5.2*1	*2 to 8.0	V
DC Output Current Range	I_O	0 to 1				A
Operating Junction Temperature	T_{jop}	–20 to +125				°C
Operating Ambient Temperature	T_{aop}	–30 to +85				°C

*1: V_{IN} (max) and I_O (max) are restricted by the relation $P_D = (V_{IN} - V_O) \times I_O$.
Please calculate these values referring to the reference data on page 13.
*2: Refer to the Dropout Voltage parameter.

■Electrical Characteristics

(T_a=25°C, V_C=2V unless otherwise specified)

Parameter	Symbol	Ratings												Unit
		SI-3018LSA			SI-3025LSA			SI-3033LSA			SI-3050LSA			
		min.	typ.	max.	min.	typ.	max.	min.	typ.	max.	min.	typ.	max.	
Output Voltage	V_O	1.764	1.800	1.836	2.450	2.500	2.550	3.234	3.300	3.366	4.90	5.00	5.10	V
	Conditions	V_{IN}=3.3V, I_O=0.5A			V_{IN}=3.3V, I_O=0.5A			V_{IN}=5V, I_O=0.5A			V_{IN}=6V, I_O=0.5A			
Dropout Voltage	V_{DIF}		–				0.4			0.4			0.4	V
	Conditions	–			I_O≤0.5A			I_O≤0.5A			I_O≤0.5A			
			0.6	1.2			0.8			0.8			0.8	
	Conditions	I_O≤1A												
Line Regulation	ΔV_{LINE}		2	10		2	10		3	10		3	15	mV
	Conditions	V_{IN}=3.1 to 3.5V, I_O=0.3A			V_{IN}=3.1 to 3.5V, I_O=0.3A			V_{IN}=4.5 to 5.5V, I_O=0.3A			V_{IN}=6 to 7V, I_O=0.3A			
Load Regulation	ΔV_{OLOAD}		10	20		10	20		10	20		10	30	mV
	Conditions	V_{IN}=3.3V, I_O=0 to 1A			V_{IN}=3.3V, I_O=0 to 1A			V_{IN}=5V, I_O=0 to 1A			V_{IN}=6V, I_O=0 to 1A			
Temperature Coefficient of Output Voltage	$\Delta V_O/\Delta T_a$		±0.3			±0.3			±0.3			±0.5		mV/°C
	Conditions	V_{IN}=3.3V, I_O=5mA, T_j=0 to 100°C			V_{IN}=3.3V, I_O=5mA, T_j=0 to 100°C			V_{IN}=5V, I_O=5mA, T_j=0 to 100°C			V_{IN}=6V, I_O=5mA, T_j=0 to 100°C			
Ripple Rejection	R_{REJ}		60			57			55			55		dB
	Conditions	V_{IN}=3.3V, f=100 to 120Hz			V_{IN}=3.3V, f=100 to 120Hz			V_{IN}=5V, f=100 to 120Hz			V_{IN}=6V, f=100 to 120Hz			
Quiescent Circuit Current	I_q		1.7	2.5		1.7	2.5		1.7	2.5		1.7	2.5	mA
	Conditions	V_{IN}=3.3V, I_O=0A			V_{IN}=3.3V, I_O=0A			V_{IN}=5V, I_O=0A			V_{IN}=6V, I_O=0A			
Circuit Current at Output OFF	I_q(OFF)			1			1			1			1	μA
	Conditions	V_{IN}=3.3V, I_O=0A, V_C=0V			V_{IN}=3.3V, I_O=0A, V_C=0V			V_{IN}=5V, I_O=0A, V_C=0V			V_{IN}=6V, I_O=0A, V_C=0V			
Overcurrent Protection Starting Current*1,3	I_{S1}	1.2			1.2			1.2			1.2			A
	Conditions	V_{IN}=3.3V			V_{IN}=3.3V			V_{IN}=5V			V_{IN}=6V			
V_C Terminal: Control Voltage (Output ON)*2	V_C, IH	2.0			2.0			2.0			2.0			V
V_C Terminal: Control Voltage (Output OFF)*2	V_C, IL			0.8			0.8			0.8			0.8	V
V_C Terminal: Control Current (Output ON)	I_C, IH		40	80		40	80		40	80		40	80	μA
	Conditions	V_C=2V												
V_C Terminal: Control Current (Output OFF)	I_C, IL		0	–5		0	–5		0	–5		0	–5	μA
	Conditions	V_C=0V												

*1: I_{S1} is specified at the 5% drop point of output voltage V_O on the condition that V_{IN} = 3.3 V (5 V for SI-3033LSA), and I_O = 0.5 A.
*2: Output is OFF when the output control terminal VC is open. Each input level is equivalent to LS-TTL level. Therefore, the device can be driven directly by LS-TTLs.
*3: These products cannot be used in the following applications. Because these applications require a certain current at start-up and so the built-in foldback-type overcurrent protection may cause errors during start-up stage.
(1) Constant current load (2) Positive and negative power supply (3) Series-connected power supply (4) V_O adjustment by raising ground voltage

■External Dimensions (SOP8)

(Unit : mm)

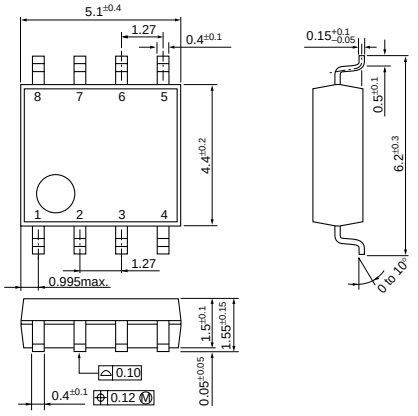

Pin Assignment
① VIN
② NC (Leave open)
③ VIN
④ VC
⑤ GND
⑥ GND
⑦ VO
⑧ VO

Plastic Mold Package Type
Flammability: UL94V-0
Product Mass: Approx. 0.1g

■Block Diagram

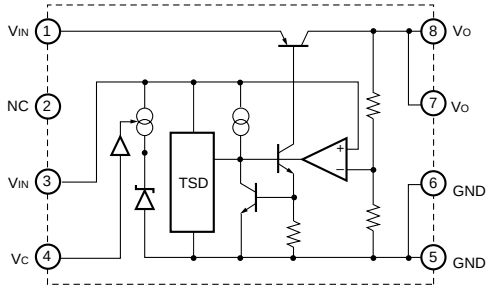

■Typical Connection Diagram

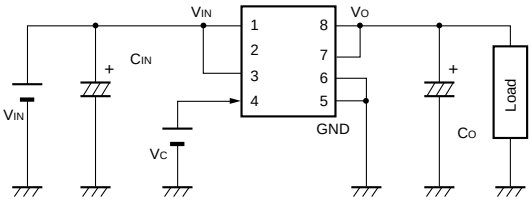

CO: Output capacitor (22 μF or larger)
CIN: Input capacitor (10 μF)
This capacitor is required in the case of an inductive input line or long wiring.
Tantalum capacitors are recommended for CIN and CO, particularly at low temperatures.
* Leave pin 2 open.

■Reference Data

PCB Copper Laminate Area vs. Junction to Ambient Air Thermal Resistance

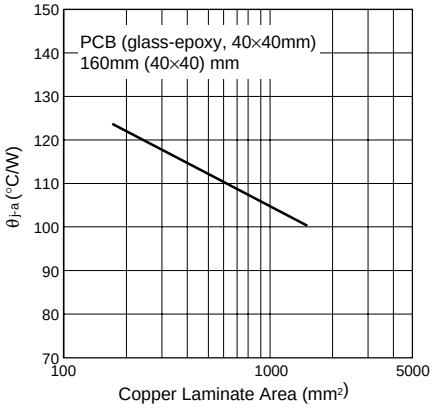

Allowable Output Current (vs. VIN-VOUT Voltage Difference) VIN-IO max

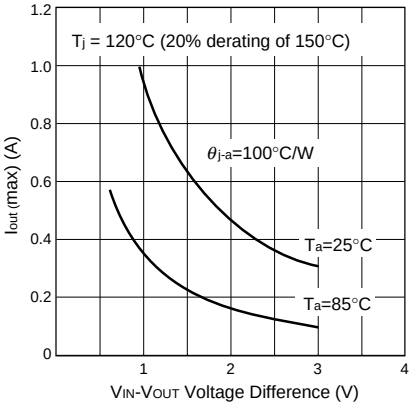

The inner frame stage, on which the PTr is mounted, is directly connected to the VOUT pin.
Therefore, enlarging the copper laminate area around the VOUT pin is really effective for a heat radiation.

SI-3000KS Series Surface-Mount, Low Current Consumption, Low Dropout Voltage Linear Regulator ICs

■Features

- Compact surface-mount package (SOP8)
- Output current: 1.0 A
- Compatible with low ESR capacitor
- Low circuit current at output OFF Iq ≤ 350 μA (I_O = 0 A, V_C = 2 V)
- Low current consumption Iq (OFF) ≤ 1 μA (V_C = 0 V)
- Low dropout voltage V_{DIF} ≤ 0.6 V (I_O = 1 A)
- 3 types of output voltages (2.5 V, 3.3 V, and variable type) available
- Output ON/OFF control terminal voltage compatible with LS-TTL
- Built-in drooping-type-overcurrent and thermal protection circuits

■Applications

- Local power supplies
- Battery-driven electronic equipment

■Absolute Maximum Ratings

(T_a=25°C)

Parameter	Symbol	Ratings	Unit
DC Input Voltage	V_{IN}*1	17	V
Output Control Terminal Voltage	V_C	V_{IN}	V
DC Output Current	I_O*1	1.0	A
Power Dissipation	P_D*1, *2	0.76	W
Junction Temperature	T_j	–40 to +125	°C
Storage Temperature	T_{stg}	–40 to +125	°C
Thermal Resistance (Junction to Ambient Air)	$\theta_{j\text{-}a}$	130	°C/W
Thermal resistance (Junction to Lead (pin 7))	$\theta_{j\text{-}L}$	22	°C/W

*1: V_{IN} (max) and I_O (max) are restricted by the relation PD = (V_{IN} - V_O) × I_O. Please calculate these values referring to the Copper laminate area vs. Power dissipation data as shown hereinafter.
*2: When mounted on a glass epoxy board of 1600 mm^2 (copper laminate area 2%).

■Electrical Characteristics

(T_a=25°C, V_C=2 V unless otherwise specified)

Parameter		Symbol	Ratings									Unit
			SI-3012KS (variable type)			SI-3025KS			SI-3033KS			
			min.	typ.	max.	min.	typ.	max.	min.	typ.	max.	
Input Voltage		V_{IN}	2.4			*1			*1			V
Output Voltage (Reference voltage V_{ADJ} for SI-3012KS)		V_O (V_{ADJ})	1.24	1.28	1.32	2.45	2.50	2.55	3.234	3.300	3.366	V
		Conditions	V_{IN}=3.3V, I_O=10mA			V_{IN}=3.3V, I_O=10mA			V_{IN}=5V, I_O=10mA			
Dropout Voltage		V_{DIF}			0.3			0.4			0.4	V
		Conditions	I_O=0.5A (V_O=2.5V)			I_O=0.5A			I_O=0.5A			
					0.6			0.6			0.6	
		Conditions	I_O=1A (V_O=2.5V)			I_O=1A			I_O=1A			
Line Regulation		ΔV_{OLINE}			10			10			15	mV
		Conditions	V_{IN}=3.3 to 8V, I_O=10mA (V_O=2.5V)			V_{IN}=3.3 to 8V, I_O=10mA			V_{IN}=5 to 10V, I_O=10mA			
Load Regulation		ΔV_{OLOAD}			40			40			50	mV
		Conditions	V_{IN}=3.3V, I_O=0 to 1A (V_O=2.5V)			V_{IN}=3.3V, I_O=0 to 1A			V_{IN}=5V, I_O=0 to 1A			
Quiescent Circuit Current		I_q			350			350			350	μA
		Conditions	V_{IN}=3.3V, I_O=0A, V_C=2V, R2=24kΩ			V_{IN}=3.3V, I_O=0A, V_C=2V			V_{IN}=5V, I_O=0A, V_C=2V			
Circuit Current at Output OFF		I_q (OFF)			1			1			1	μA
		Conditions	V_{IN}=3.3V, V_C=0V			V_{IN}=3.3V, V_C=0V			V_{IN}=5V, V_C=0V			
Temperature Coefficient of Output Voltage		$\Delta V_O/\Delta T_a$		±0.3			±0.3			±0.3		mV/°C
		Conditions	T_j=0 to 100°C (V_O=2.5V)			T_j=0 to 100°C			T_j=0 to 100°C			
Ripple Rejection		R_{REJ}		55			55			55		dB
		Conditions	V_{IN}=3.3V, f=100 to 120Hz (V_O=2.5V)			V_{IN}=3.3V, f=100 to 120Hz			V_{IN}=5V, f=100 to 120Hz			
Overcurrent Protection Starting Current*2		I_{S1}	1.2			1.2			1.2			A
		Conditions	V_{IN}=3.3V (V_O=2.5V)			V_{IN}=3.3V			V_{IN}=5V			
V_C Terminal	Control Voltage (Output ON)*3	V_C, IH	2.0			2.0			2.0			V
	Control Voltage (Output OFF)	V_C, IL			0.8			0.8			0.8	
	Control Current (Output ON)	I_C, IH			40			40			40	μA
		Conditions	V_C=2V									
	Control Current (Output OFF)	I_C, IL	–5	0		–5	0		–5	0		μA
		Conditions	V_C=0V									

*1: Refer to the Dropout Voltage parameter.
*2: The I_{S1} is specified at the 5% drop point of output voltage V_O on the condition that V_{IN} = V_O + 1 V, and I_O = 10 mA.
*3: Output is OFF when the output control terminal V_C is open. Each input level is equivalent to LS-TTL level. Therefore, the device can be driven directly by LS-TTLs.

■External Dimensions (SOP8)

(Unit : mm)

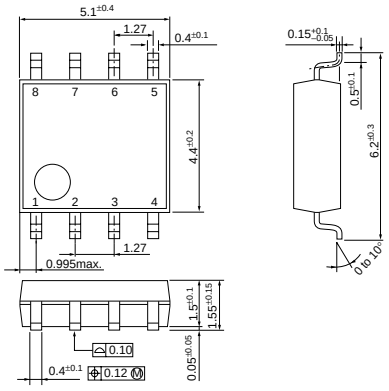

Pin Assignment
① V_C
② V_{IN}
③ V_O
④ Sence (ADJ for SI-3012KS)
⑤ GND
⑥ GND
⑦ GND
⑧ GND

Plastic Mold Package Type
Flammability: UL 94V-0
Product Mass: Approx. 0.1 g

■Block Diagram

●SI-3012KS

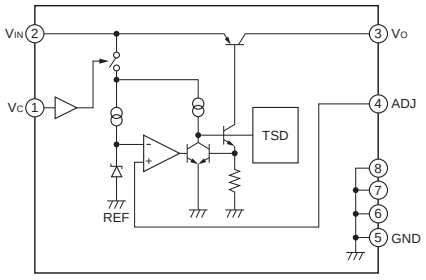

●SI-3025KS, SI-3033KS

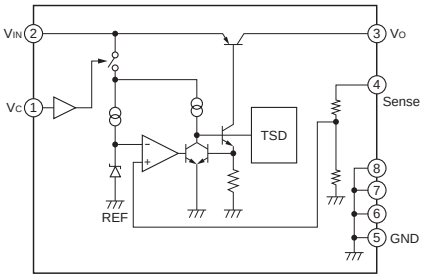

■Typical Connection Diagram

●SI-3012KS

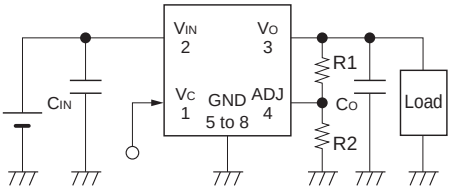

●SI-3025KS, SI-3033KS

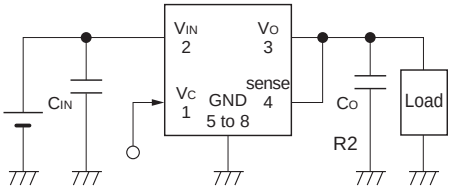

R_1, R_2: Output voltage setting resistors
The output voltage can be set by connecting R_1 and R_2 as shown above.
The recommended value of R_2 is 24 kΩ .

$R1=(V_O–V_{ADJ})÷(V_{ADJ}/R2)$

C_{IN}: Input capacitor (22 μF or larger)
C_O: Output capacitor (22 μF or larger)
For SI-3000KS series, Co has to be a low ESR capacitor.
When using the electrolytic capacitor, the SI-3000KS series may oscillate at a low temperature.

■Reference Data

Copper Laminate Area vs. Thermal Resistance

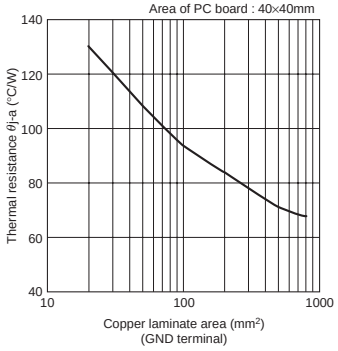

Copper Laminate Area vs. Power Dissipation

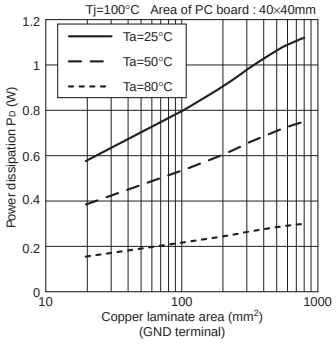

- Obtaining the junction temperature
  Measure the temperature T_L at the lead part of the GND pin (pin 7) with a thermocouple, etc. Then, substitute this value in the following formula to obtain the junction temperature.

  $T_j=P_D \times \theta_{j-L} + T_L \quad (\theta_{j-L} = 22°C/W)$

SI-3000KM Series Surface Mount, Low Current Consumption, Low Dropout Voltage Linear Regulator ICs

■Features

- Compact surface mount package (TO252-5)
- Output current: 1.0 A
- Low dropout voltage: V_{DIF} ≤ 0.6 V (at I_O = 1.0 A)
- Low current consumption: Iq ≤ 350 μA (600 μA for SI-3010KM/SI-3050KM/SI-3090KM/SI-3120KM)
- Low circuit current at output OFF: Iq (OFF) ≤ 1 μA
- Built-in overcurrent and thermal protection circuits
- Output ON/OFF control function
- Compatible with low ESR capacitors (SI-3012KM/SI-3025KM/SI-3033KM)

■Absolute Maximum Ratings

(T_a=25°C)

Parameter	Symbol	Ratings		Unit
		SI-3012KM/ 3025KM/3033KM	SI-3010KM/3050KM/ 3090KM/3120KM	
DC Input Voltage	V_{IN}	17	35*1	V
Output Control Terminal Voltage	V_C	V_{IN}		V
DC Output Current	I_O	1.0		A
Power Dissipation	P_D*2	1		W
Junction Temperature	T_j	–30 to +125		°C
Storage Temperature	T_{stg}	–30 to +125		°C
Thermal Resistance (Junction to Ambient Air)	$\theta_{j\text{-}a}$	95		°C/W
Thermal Resistance (Junction to case)	$\theta_{j\text{-}c}$	6		°C/W

*1: A built-in input-overvoltage-protection circuit shuts down the output voltage at the Input Overvoltage Shutdown Voltage of the electrical characteristics.
*2: When mounted on glass-epoxy board of 900mm^2 (copper laminate area 4.3%).

■Applications

- Secondary stabilized power supply (local power supply)

■Recommended Operating Conditions

Parameter	Symbol	Ratings							Unit
		SI-3012KM	SI-3025KM	SI-3033KM	SI-3010KM	SI-3050KM	SI-3090KM	SI-3120KM	
Input Voltage Range	V_{IN}	2.4*2 to 6.0*1	2.4*2 to 5*1	*2 to 6*1	2.4*2 to 27*1	2.4*2 to 17*1	*2 to 20*1	*2 to 25*1	V
Output Current Range	I_O	0 to 1.0							A
Operating Ambient Temperature	T_{op}	–30 to +85							°C
Operating Junction Temperature	T_j	–20 to +100							°C

*1: V_{IN} (max) and I_O (max) are restricted according to operating conditions due to the relation $P_D = (V_{IN}-V_O) \times I_O$. Please calculate these values referring to the Copper Laminate Area vs. Power Dissipation data as shown hereinafter.
*2: Refer to the Dropout Voltage parameter.

■Electrical Characteristics 1 (Low Input Voltage type compatible with low ESR output capacitor)

Parameter	Symbol	Ratings									Unit
		SI-3012KM (Variable type)			SI-3025KM			SI-3033KM			
		min.	typ.	max.	min.	typ.	max.	min.	typ.	max.	
Input Voltage	V_{IN}	2.4*1			*1			*1			V
Output Voltage (Reference voltage V_{ADJ} for SI-3012KM)	V_O (V_{ADJ})	1.24	1.28	1.32	2.45	2.50	2.55	3.234	3.300	3.366	V
	Conditions	V_{IN}=3.3V, I_O=10mA			V_{IN}=3.3V, I_O=10mA			V_{IN}=5V, I_O=10mA			
Line Regulation	ΔV_{OLINE}			15			15			15	mV
	Conditions	V_{IN}=3.3 to 8V, I_O=10mA (V_O=2.5V)			V_{IN}=3.3 to 8V, I_O=10mA			V_{IN}=5 to 10V, I_O=10mA			
Load Regulation	ΔV_{OLOAD}			40			40			50	mV
	Conditions	V_{IN}=3.3V, I_O=0 to 1A (V_O=2.5V)			V_{IN}=3.3V, I_O=0 to 1A			V_{IN}=5V, I_O=0 to 1A			
Dropout Voltage	V_{DIF}			0.4			0.4			0.4	V
	Conditions	I_O=0.5A (V_O=2.5V)			I_O=0.5A			I_O=0.5A			
				0.6			0.6			0.6	
	Conditions	I_O=1A (V_O=2.5V)			I_O=1A			I_O=1A			
Quiescent Circuit Current	Iq			350			350			350	μA
	Conditions	V_{IN}=3.3V, I_O=0A, V_C=2V, R2=24kΩ			V_{IN}=3.3V, I_O=0A, V_C=2V			V_{IN}=5V, I_O=0A, V_C=2V			
Circuit Current at Output OFF	Iq (OFF)			1			1			1	μA
	Conditions	V_{IN}=3.3V, V_C=0V			V_{IN}=3.3V, V_C=0V			V_{IN}=5V, V_C=0V			
Temperature Coefficient of Output Voltage	$\Delta V_O/\Delta T_a$		±0.3			±0.3			±0.3		mV/°C
	Conditions	T_j=0 to 100°C (V_C=2.5V)			T_j=0 to 100°C			T_j=0 to 100°C			
Ripple Rejection	R_{REJ}		55			55			55		dB
	Conditions	V_{IN}=3.3V, f=100 to 120Hz (V_O=2.5V)			V_{IN}=3.3V, f=100 to 120Hz			V_{IN}=5V, f=100 to 120Hz			
Overcurrent Protection Starting Current*2	I_{S1}	1.1			1.1			1.1			A
	Conditions	V_{IN}=3.3V			V_{IN}=3.3V			V_{IN}=5V			
V_C Terminal: Control Voltage (Output ON)*3	V_C, IH	2.0			2.0			2.0			V
V_C Terminal: Control Voltage (Output OFF)	V_C, IL			0.8			0.8			0.8	
V_C Terminal: Control Current (Output ON)	I_C, IH			40			40			40	μA
	Conditions	V_C=2V			V_C=2V			V_C=2V			
V_C Terminal: Control Current (Output OFF)	I_C, IL	–5	0		–5	0		–5	0		μA
	Conditions		V_C=0V			V_C=0V			V_C=0V		

*1: Refer to the Dropout Voltage parameter.
*2: I_{S1} is specified at the 5% drop point of output voltage V_O on the condition that V_{IN}=overcurrent protection starting current, I_O = 10 mA).
*3: Output is OFF when output control terminal (V_C terminal) is open. Each input level is equivalent to LS-TTL level. Therefore, the device can be driven directly by LS-TTLs.

■Electrical Characteristics 2 (High Input Voltage type)

Parameter	Symbol	Ratings												Unit
		SI-3010KM (Variable type)			SI-3050KM			SI-3090KM			SI-3120KM			
		min.	typ.	max.	min.	typ.	max.	min.	typ.	max.	min.	typ.	max.	
Input Voltage	V_{IN}	2.4*1			*1			*1			*1			V
Output Voltage (Reference voltage V_{ADJ} for SI-3010KM)	V_O (V_{ADJ})	0.98	1.00	1.02	4.90	5.00	5.10	8.82	9.00	9.18	11.76	12.00	12.24	V
	Conditions	V_{IN}=7V, I_O=10mA			V_{IN}=7V, I_O=10mA			V_{IN}=11V, I_O=10mA			V_{IN}=14V, I_O=10mA			
Line Regulation	ΔV_{OLINE}			30			30			54			72	mV
	Conditions	V_{IN}=6 to 11V, I_O=10mA (V_O=5V)			V_{IN}=6 to 11V, I_O=10mA			V_{IN}=10 to 15V, I_O=10mA			V_{IN}=13 to 18V, I_O=10mA			
Load Regulation	ΔV_{OLOAD}			75			75			135			180	mV
	Conditions	V_{IN}=7V, I_O=0 to 1A (V_O=5V)			V_{IN}=7V, I_O=0 to 1A			V_{IN}=11V, I_O=0 to 1A			V_{IN}=14V, I_O=0 to 1A			
Dropout Voltage	V_{DIF}			0.3			0.3			0.3			0.3	V
	Conditions	I_O=0.5A (V_O=5V)			I_O=0.5A			I_O=0.5A			I_O=0.5A			
				0.6			0.6			0.6			0.6	
	Conditions	I_O=1A (V_O=5V)			I_O=1A			I_O=1A			I_O=1A			
Quiescent Circuit Current	Iq			600			600			600			600	μA
	Conditions	V_{IN}=7V, I_O=0A, V_C=2V R2=10kΩ			V_{IN}=7V, I_O=0A, V_C=2V			V_{IN}=11V, I_O=0A, V_C=2V			V_{IN}=14V, I_O=0A, V_C=2V			
Circuit Current at Output OFF	Iq (OFF)			1			1			1			1	μA
	Conditions	V_{IN}=7V, V_C=0V			V_{IN}=7V, V_C=0V			V_{IN}=11V, V_C=0V			V_{IN}=14V, V_C=0V			
Temperature Coefficient of Output Voltage	$\Delta V_O/\Delta T_a$		±0.5			±0.5			±1.0			±1.5		mV/°C
	Conditions	T_j=0 to 100°C (V_O=5V)			T_j=0 to 100°C			T_j=0 to 100°C			T_j=0 to 100°C			
Ripple Rejection	R_{REJ}		75			75			68			66		dB
	Conditions	V_{IN}=7V, f=100 to 120Hz (V_O=5V)			V_{IN}=7V, f=100 to 120Hz			V_{IN}=11V, f=100 to 120Hz			V_{IN}=14V, f=100 to 120Hz			
Overcurrent Protection Starting Current*2	I_{S1}	1.1			1.1			1.1			1.1			A
	Conditions	V_{IN}=7V			V_{IN}=7V			V_{IN}=11V			V_{IN}=14V			
V_C Terminal: Control Voltage (Output ON)*3	V_C, IH	2.0			2.0			2.0			2.0			V
V_C Terminal: Control Voltage (Output OFF)*3	V_C, IL			0.8			0.8			0.8			0.8	V
V_C Terminal: Control Current (Output ON)	I_C, IH			40			40			40			40	μA
	Conditions	V_C=2V			V_C=2V			V_C=2V			V_C=2V			
V_C Terminal: Control Current (Output OFF)	I_C, IL	–5	0		–5	0		–5	0		–5	0		μA
	Conditions	V_C=0V			V_C=0V			V_C=0V			V_C=0V			
Input Overvoltage Shutdown Voltage	V_{OVP}	33			26			30			33			V
	Conditions	I_O=10mA			I_O=10mA			I_O=10mA			I_O=10mA			

*1: Refer to the Dropout Voltage parameter.
*2: I_{S1} is specified at the 5% drop point of output voltage V_O on the condition that V_{IN}=overcurrent protection starting current, I_O = 10 mA).
*3: Output is OFF when output control terminal (V_C terminal) is open. Each input level is equivalent to LS-TTL level. Therefore, the device can be driven directly by LS-TTLs.
*4: SI-3010KM, SI-3050KM and SI-3090KM, SI-3120KM cannot be used in the following applications because the built-in foldback-type overcurrent protection may cause errors during start-up stage.
(1) Constant current load (2) Positive and negative power supply (3) Series-connected power supply (4) V_O adjustment by raising ground voltage
*5: V_{IN} (max) and I_O (max) are restricted by the relation $P_D = (V_{IN} - V_O) \times I_O$. Please calculate these values referring to the Copper Laminate Area vs. Power Dissipation data as shown hereinafter.

■External Dimensions (TO252-5)

(Unit : mm)

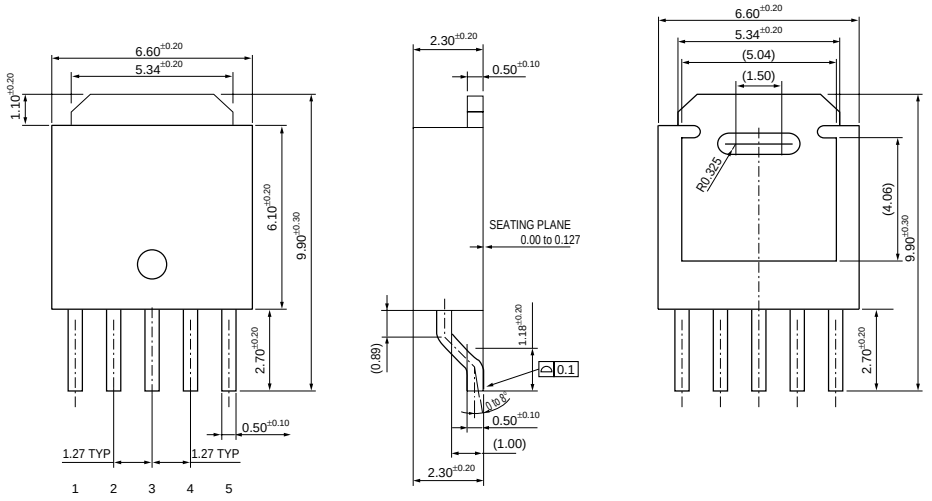

Pin Assignment
① V_C
② V_{IN}
③ GND
④ V_O
⑤ Sense
(ADJ for SI-3010KM/SI-3120KM)

Plastic Mold Package Type
Flammability: UL94V-0
Product Mass: Approx. 0.33g

■Block Diagram

●SI-3010KM/SI-3012KM

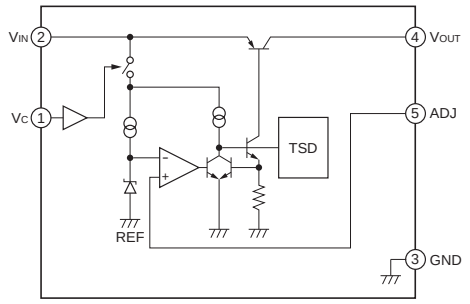

●SI-3025KM/SI-3033KM/SI-3050KM/SI-3090KM/SI-3120KM

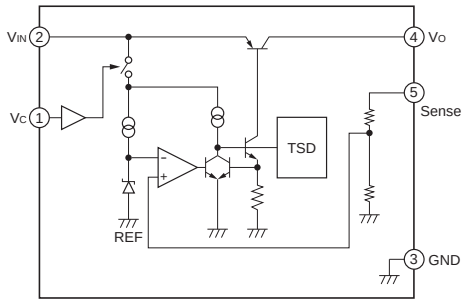

■Typical Connection Diagram

●SI-3025KM/SI-3033KM/SI-3050KM/
SI-3090KM/SI-3120KM

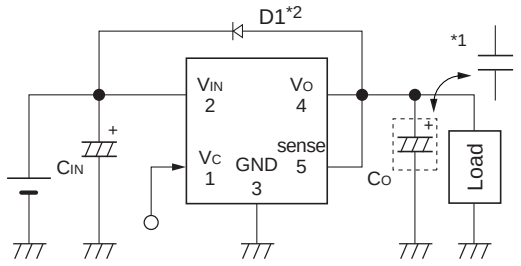

●SI-3010KM/SI-3012KM

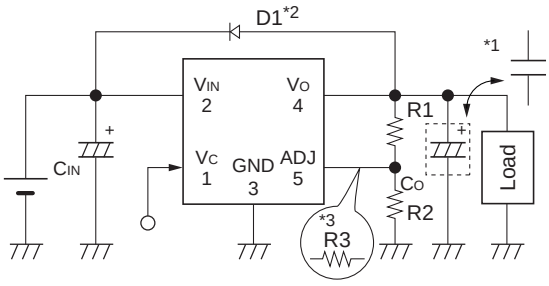

CIN: Input capacitor (22 μF or larger)
CO: Output capacitor

*1: SI-3012KM/3025KM/3033KM (22 μF or larger)
It comes with a circuit configuration that uses a low ESR capacitor for the output capacitor.
If an electrolytic capacitor is used, oscillation may occur at a low temperature.

SI-3010KM/3050KM/3090KM/3120KM (47 μF or larger)
If a low ESR capacitor is used, oscillation may occur.

*2: D1: Reverse bias protection diode
This diode is required for protection against reverse biasing between the input and output.
(Sanken SJPL-H2 is recommended.)
This diode is not required at $V_O \leq 3.3$ V.

R1, R2: Output voltage setting resistors
Output voltage can be set by connecting R1 and R2 as shown above.
R2: 10 kΩ is recommended (24 kΩ for SI-3012KM).

$R1=(V_O-V_{ADJ})\div(V_{ADJ}/R2)$

*3: For SI-3010KM, insert R3 in case of setting V_O to $V_O \leq 1.5$V.
Recommended value for R3 is 10kΩ.

■Reference Data

Copper Laminate Area-Thermal Resistance

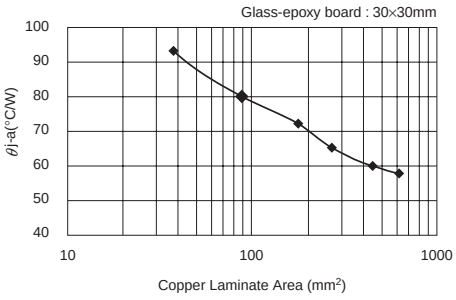

Copper Laminate Area-Power Dissipation

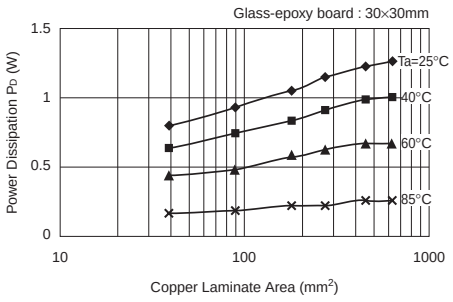

- Obtaining the junction temperature
Measure the temperature T_C at the lead part of the GND pin with a thermocouple, etc. Then, substitute this value in the following formula to obtain the junction temperature.

$T_j=P_D \times \theta_{j-c} + T_C \quad (\theta_{j-c} = 6°C/W)$

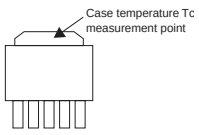

SI-3000KD Series Surface-Mount, Low Current Consumption, Low Dropout Voltage Linear Regulator ICs

■Features

- Compact surface-mount package (TO263-5)
- Output current: 1.0A
- Low dropout voltage: V_{DIF} ≤ 0.6V (at I_O = 1.0A)
- Low circuit current consumption: Iq ≤ 350 μA (600 μA for SI-3010KD, SI-3050KD)
- Low circuit current at output OFF: Iq (OFF) ≤ 1 μA
- Built-in overcurrent, thermal protection circuits
- Compatible with low ESR capacitors (SI-3012KD and SI-3033KD)

■Absolute Maximum Ratings

(T_a=25°C)

Parameter	Symbol	Ratings		Unit
		SI-3012KD/3033KD	SI-3010KD/3050KD	
DC Input Voltage	V_{IN}	17	35*1	V
DC Output Current	I_O	1.0		A
Power Dissipation	P_D*2	3		W
Junction Temperature	T_j	–30 to +125		°C
Storage Temperature	T_{stg}	–30 to +125		°C
Thermal Resistance (Junction to Ambient Air)	$\theta_{j\text{-}a}$	33.3		°C/W
Thermal Resistance (Junction to Case)	$\theta_{j\text{-}c}$	3		°C/W

*1: A built-in input-overvoltage-protection circuit shuts down the output voltage at the Input Overvoltage Shutdown Voltage of the electrical characteristics.
*2: When mounted on glass-epoxy board of 1600mm^2 (copper laminate area 100%).

■Applications

- Secondary stabilized power supply (local power supply)

■Electrical Characteristics 1 (Low Input Voltage type compatible with low ESR output capacitor)

(T_a=25°C, V_C=2V unless otherwise specified)

Parameter		Symbol	Ratings						Unit
			SI-3012KD (Variable type)			SI-3033KD			
			min.	typ.	max.	min.	typ.	max.	
Input Voltage		V_{IN}	2.4*3		*4	*3		*4	V
Output Voltage (Reference Voltage for SI-3012KD)		V_O (V_{ADJ})	1.24	1.28	1.32	3.234	3.300	3.366	V
		Conditions	V_{IN}=3.3V, I_O=10mA			V_{IN}=5V, I_O=10mA			
Line Regulation		ΔV_{OLINE}			15			15	mV
		Conditions	V_{IN}=3.3 to 8V, I_O=10mA (V_O=2.5V)			V_{IN}=5 to 10V, I_O=10mA			
Load Regulation		ΔV_{OLOAD}			40			50	mV
		Conditions	V_{IN}=3.3V, I_O=0 to 1A (V_O=2.5V)			V_{IN}=5V, I_O=0 to 1A			
Dropout Voltage		V_{DIF}			0.4			0.4	V
		Conditions	I_O=0.5A (V_O=2.5V)			I_O=0.5A			
					0.6			0.6	
		Conditions	I_O=1A (V_O=2.5V)			I_O=1A			
Quiescent Circuit Current		I_q			350			350	μA
		Conditions	V_{IN}=3.3V, I_O=0A, V_C=2V, R2=2.4kΩ			V_{IN}=5V, I_O=0A,V_C=2V			
Circuit Current at Output OFF		I_q (OFF)			1			1	μA
		Conditions	V_{IN}=3.3V, V_C=0V			V_{IN}=5V, V_C=0V			
Temperature Coefficient of Output Voltage		$\Delta V_O/\Delta T_a$		±0.3			±0.3		mV/°C
		Conditions	T_j=0 to 100°C (V_O=2.5V)			T_j=0 to 100°C			
Ripple Rejection		R_{REJ}		55			55		dB
		Conditions	V_{IN}=3.3V, f=100 to 120Hz, I_O=0.1A (V_O=2.5V)			V_{IN}=5V, f=100 to 120Hz, I_O=0.1A			
Overcurrent Protection Starting Current*1		I_{S1}	1.1			1.1			A
		Conditions	V_{IN}=3.3V			V_{IN}=5V			
V_C Terminal	Control Voltage (Output ON)*2	V_C, IH	2			2			V
	Control Voltage (Output OFF)	V_C, IL			0.8			0.8	
	Control Current (Output ON)	I_C, IH			40			40	μA
		Conditions	V_C=2V			V_C=2V			
	Control Current (Output OFF)	I_C, IL	–5	0		–5	0		μA
		Conditions	V_C=0V			V_C=0V			

*1: I_{S1} is specified at the 5% drop point of output voltage V_O under the condition of Output Voltage parameter.
*2: Output is OFF when the output control terminal (V_C terminal) is open. Each input level is equivalent to LS-TTL level. Therefore, the device can be driven directly by LS-TTLs.
*3: Refer to the Dropout Voltage parameter.
*4: V_{IN} (max) and I_O (max) are restricted by the relation P_D = (V_{IN} - V_O) × I_O. Please calculate these values referring to the Copper laminate area vs. Power dissipation data.

■Electrical Characteristics 2 (High Input Voltage Type)

Parameter		Symbol	Ratings						Unit
			SI-3010KD (Variable type)			SI-3050KD			
			min.	typ.	max.	min.	typ.	max.	
Input Voltage		V_{IN}	2.4*1		27*5	*1		15*5	V
Output Voltage (Reference Voltage V_{ADJ} for SI-3010KD)		V_O (V_{ADJ})	0.98	1.00	1.02	4.90	5.00	5.10	V
		Conditions	V_{IN}=7V, I_O=10mA			V_{IN}=7V, I_O=10mA			
Line Regulation		ΔV_{OLINE}			30			30	mV
		Conditions	V_{IN}=6 to 11V, I_O=10mA (V_O=5V)			V_{IN}=6 to 11V, I_O=10mA			
Load Regulation		ΔV_{OLOAD}			75			75	mV
		Conditions	V_{IN}=7V, I_O=0 to 1A (V_O=5V)			V_{IN}=7V, I_O=0 to 1A			
Dropout Voltage		V_{DIF}			0.3			0.3	V
		Conditions	I_O=0.5A (V_O=5V)			I_O=0.5A			
					0.6			0.6	
		Conditions	I_O=1A (V_O=5V)			I_O=1A			
Quiescent Circuit Current		I_q			600			600	μA
		Conditions	V_{IN}=7V, I_O=0A, V_C=2V R2=10kΩ			V_{IN}=7V, I_O=0A, V_C=2V			
Circuit Current at Output OFF		I_q (OFF)			1			1	μA
		Conditions	V_{IN}=7V, V_C=0V			V_{IN}=7V, V_C=0V			
Temperature Coefficient of Output Voltage		$\Delta V_O/\Delta T_a$		±0.5			±0.5		mV/°C
		Conditions	T_j=0 to 100°C (V_O=5V)			T_j=0 to 100°C			
Ripple Rejection		R_{REJ}		75			75		dB
		Conditions	V_{IN}=7V, f=100 to 120Hz, I_O=0.1A (V_O=5V)			V_{IN}=7V, f=100 to 120Hz, I_O=0.1A			
Overcurrent Protection Starting Current*2 *4		I_{S1}	1.1			1.1			A
		Conditions	V_{IN}=7V			V_{IN}=7V			
V_C Terminal	Control Voltage (Output ON)*3	V_C, IH	2.0			2.0			V
	Control Voltage (Output OFF)*3	V_C, IL			0.8			0.8	
	Control Current (Output ON)	I_C, IH			40			40	μA
		Conditions	V_C=2V			V_C=2V			
	Control Current (Output OFF)	I_C, IL	–5	0		–5	0		μA
		Conditions	V_C=0V			V_C=0V			
Input Overvoltage Shutdown Voltage		V_{OVP}	33			26			V
		Conditions	I_O=10mA			I_O=10mA			

*1: Refer to the Dropout Voltage parameter.
*2: I_{S1} is specified at the 5% drop point of output voltage V_O under the condition of Output Voltage parameter.
*3: Output is OFF when the output control terminal (V_C terminal) is open. Each input level is equivalent to LS-TTL level. Therefore, the device can be driven directly by LS-TTLs.
*4: SI-3010KD, SI-3050KD, cannot be used in the following applications because the built-in foldback-type overcurrent protection may cause errors during start-up stage.
(1) Constant current load (2) Positive and negative power supply (3) Series-connected power supply (4) V_O adjustment by raising ground voltage
*5: V_{IN} (max) and I_O (max) are restricted by the relation $P_D = (V_{IN} - V_O) \times I_O$. Please calculate these values referring to the Copper laminate area vs. Power dissipation data as shown hereinafter.

■External Dimensions (TO263-5)

(unit : mm)

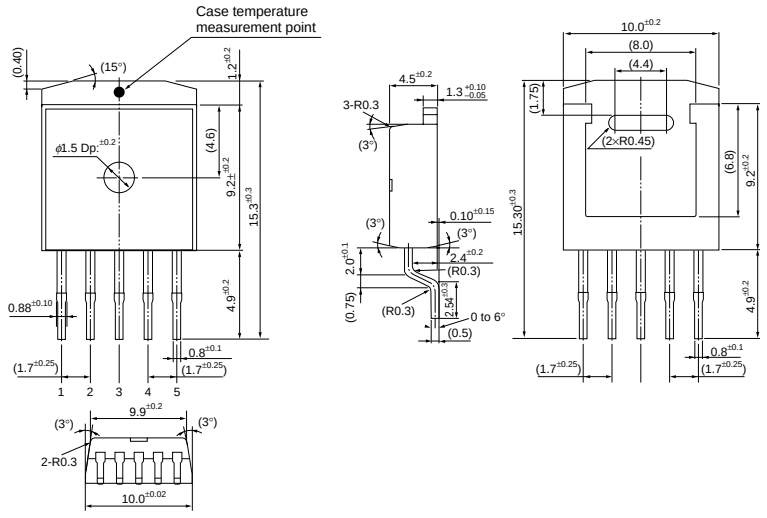

Pin Assignment
① V_C
② V_{IN}
③ GND (Common to the rear side of product)
④ V_O
⑤ Sense
(ADJ for SI-3010KD/3012KD)

Plastic Mold Package Type
Flammability: UL94V-0
Product Mass: Approx. 1.48g

■Block Diagram

●SI-3010KD/SI-3012KD

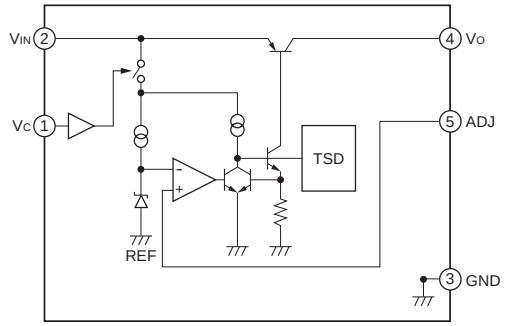

●SI-3033KD/SI-3050KD

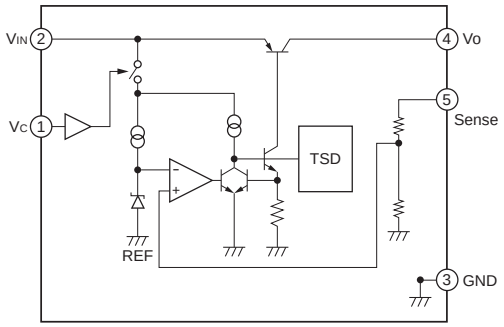

■Typical Connection Diagram

●SI-3033KD/SI-3050KD

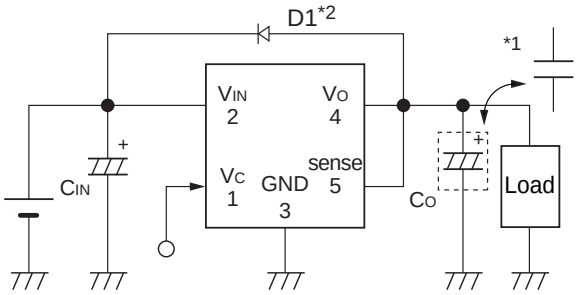

●SI-3010KD/SI-3012KD

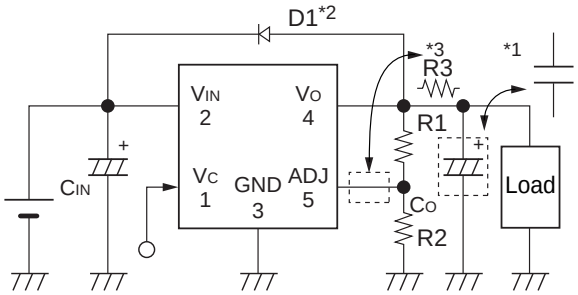

CIN: Input capacitor (22 μF or larger)
CO: Output capacitor

*1: SI-3012KD/3033KD (22 μF or larger)
Co has to be a low ESR capacitor such as a ceramic capacitor.
When using the electrolytic capacitor, oscillation may occur at a low temperature.
SI-3010KD/3050KD/ (47 μF or larger)
If a low ESR capacitor is used, oscillation may occur.

*2: D1: Reverse bias protection diode
This diode is required for protection against reverse biasing between the input and output.
(Sanken SJPL-H2 is recommended.)
This diode is not required at $V_O \leq 3.3V$.

R1, R2: Output voltage setting resistors
The output voltage can be set by connecting R1 and R2 as shown above.
The recommended value for R2 is 10Ω (24kΩ for SI-3012KD).

$R1=(V_O-V_{ADJ})\div(V_{ADJ}/R2)$

*3: For SI-3010KD, insert R3 in case of setting V_O to $V_O \leq 1.5V$.
The recommended value for R3 is 10kΩ.

■Reference Data

Copper Laminate Area (on Glass-Epoxy Board) vs.
Thermal Resistance (from Junction to Ambient Temperature) (Typical Value)

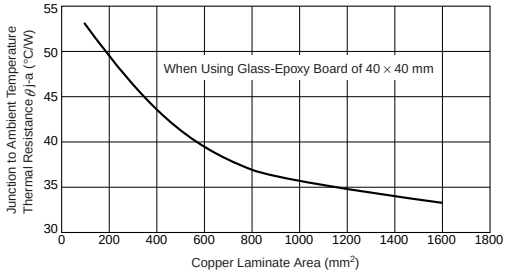

- A higher heat radiation effect can be achieved by enlarging the copper laminate area connected to the inner frame to which a monolithic ICs is mounted.
- Obtaining the junction temperature
  Measure the case temperature T_C with a thermocouple, etc. Then, substitute this value in the following formula to obtain the junction temperature.

$T_j=P_D \times \theta_{j-C} + T_C \quad (\theta_{j-C} = 3°C/W) \quad P_D= (V_{IN}-V_O)\bullet I_{OUT}$

SI-3000LLSL Series Surface-Mount, Low Current Consumption, Low Dropout Voltage Linear Regulator ICs

■Features

- Low input voltage (1.3V) and low output voltage (1.0V)
- Compact surface-mount package (SOP8)
- Low dropout voltage: $V_{DIF} \leq 0.3V$ (at $I_O = 1.5A$)
- Built-in overcurrent, input-overvoltage and thermal protection circuits
- Built-in ON/OFF function (OFF state circuit current: 1μA max.)
- Compatible with low ESR capacitors

■Absolute Maximum Ratings

(T_a=25°C)

Parameter	Symbol	Ratings	Unit
DC Input Voltage	V_{IN}	10	V
DC Bias Voltage	V_B	10	V
Output Control Terminal Voltage	V_C	V_{IN}	V
DC Output Current	I_O	1.5	A
Power Dissipation	P_D*1	1.1	W
Junction Temperature	T_j	–30 to +125	°C
Operating Ambient Temperature	T_{op}	–30 to +100	°C
Storage Temperature	T_{stg}	–30 to +125	°C
Thermal Resistance (Junction to Lead (Pin 8))	$\theta_{(j\text{-}L)}$	36	°C/W
Thermal Resistance (Junction to Ambient Air)	$\theta_{(j\text{-}a)}$*1	100	°C/W

*1: When mounted on glass-epoxy board of 40 × 40mm (copper laminate area 100%).

■Applications

- On-board local power supply
- For stabilization of the secondary-side output voltage of switching power supplies

■Recommended Operating Conditions

Parameter	Symbol	Ratings	Unit
		SI-3010LLSL	
Input Voltage	V_{IN}	1.4 to 3.6*1	V
Bias Voltage	V_B	3.3 to 5.5	V
Output Current	I_O	0 to 1.5*1	A
Operating Ambient Temperature	T_{op}	–20 to +85*1	°C

*1: V_{IN} (max) and I_O (max) are restricted by the relation $P_D = (V_{IN} - V_O) \times I_O$.

■Electrical Characteristics

(T_a=25°C, V_C=2V, V_{IN}=1.8V, V_B=3.3V, V_O=1.5V unless otherwise specified)

Parameter		Symbol	Ratings			Unit
			SI-3010LLSL			
			min.	typ.	max.	
Reference Voltage		V_{ADJ}	0.980	1.000	1.020	V
		Conditions	I_O=10mA			
Line Regulation		ΔV_{OLINE}			10	mV
		Conditions	V_{IN}=1.7 to 2.5V, I_O=10mA			
Load Regulation		ΔV_{OLOAD}			30	mV
		Conditions	V_{IN}=1.8V, I_O=0 to 1.5A			
Dropout Voltage		V_{DIF}			0.3	V
		Conditions	I_O=1.0A			
Quiescent Circuit Current		I_q		500	800	μA
		Conditions	I_O=0A, R_2=10kΩ			
Circuit Current at Output OFF		$I_{q\ (OFF)}$			1	μA
		Conditions	V_C=0V			
Temperature Coefficient of Output Voltage		$\Delta V_O/\Delta T_a$		±0.2		mV/°C
		Conditions	T_j=0 to 100°C			
Overcurrent Protection Starting Current*1		I_{S1}	1.6			A
		Conditions	V_{IN}=1.8V, V_B=3.3V			
V_C Terminal	Control Voltage (Output ON)*2	V_C, IH	2			V
	Control Voltage (Output OFF)	V_C, IL			0.8	V
	Control Current (Output ON)	I_C, IH			50	μA
		Conditions	V_C=2.7V			
	Control Current (Output OFF)	I_C, IL			10	μA
		Conditions	V_C=0.4V			

*1: I_{S1} is specified at the 5% drop point of output voltage V_O on the condition that V_{IN} = overcurrent protection starting current, I_O = 10 mA.
*2: Output is OFF when the output control terminal (V_C terminal) is open. Each input level is equivalent to LS-TTL level. Therefore, the device can be driven directly by LS-TTLs.

■External Dimensions (SOP8)

(unit : mm)

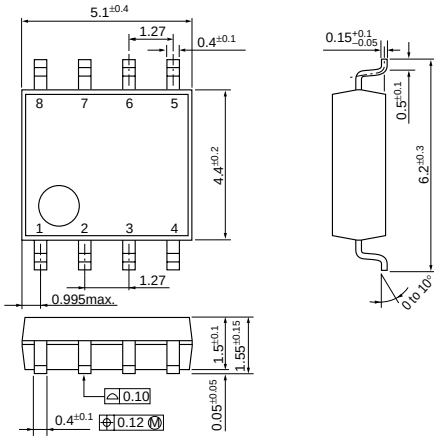

Pin Assignment
① V_O
② ADJ
③ V_B
④ V_C
⑤ GND
⑥ GND
⑦ V_{IN}
⑧ V_{IN}

Plastic Mold Package Type
Flammability: UL94V-0
Product Mass: Approx. 0.1g

■Typical Connection Diagram/Block Diagram

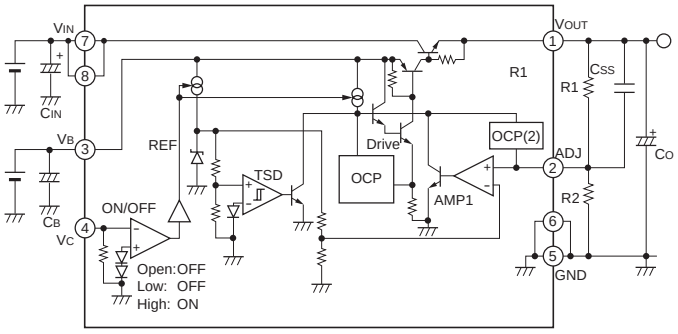

C_{IN}, C_B: Input and bias capacitors (Approx. 0.1 to 10μF)
Required when the input line contains inductance or when the wiring is long.

C_O: Output capacitor (47μF or larger)
SI-3010LLSL is designed to use a low ESR capacitor (such as a ceramic capacitor) for the output capacitor. The recommended ESR value for an output capacitor is 500mΩ or less (at room temperature).

R1, R2: Output voltage setting resistors
The output voltage can be set by connecting R1 and R2 as shown at left.
The recommended value for R2 is 10kΩ.

$$R1 = (V_O - V_{ADJ}) / (V_{ADJ}/R2)$$

C_{SS}: Soft start capacitor
The rising time of the output voltage can be set by connecting C_{SS} between V_{OUT} and ADJ.

■Reference Data

Copper Laminate Area - Power Dissipation

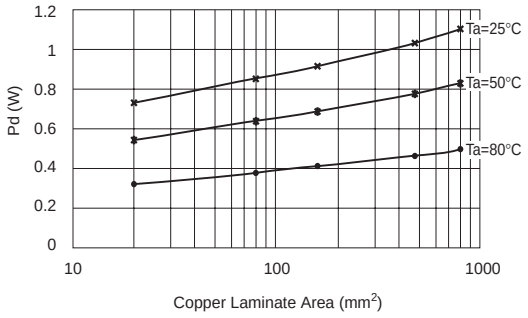

SI-3000ZD Series Surface-Mount, Low Dropout Voltage Linear Regulator ICs

■Features

- Compact surface-mount package (TO263-5)
- Output current: 3.0A
- Low dropout voltage: $V_{DIF} \leq 0.6V$ (at $I_O = 3.0A$)
- Low circuit current at output OFF: Iq (OFF) ≤ 1μA
- Built-in overcurrent and thermal protection circuits

■Applications

- Secondary stabilized power supply (local power supply)

■Absolute Maximum Ratings

(T_a=25°C)

Parameter	Symbol	Ratings	Unit
DC Input Voltage	V_{IN} *1	10	V
Output Control Terminal Voltage	V_C	6	V
DC Output Current	I_O *1	3.0	A
Power Dissipation	P_D *3	3	W
Junction Temperature	T_j	–30 to +125	°C
Operating Ambient Temperature	T_{op}	–30 to +85	°C
Storage Temperature	T_{stg}	–40 to +125	°C
Thermal Resistance (Junction to Ambient Air)	$\theta_{j\text{-}a}$	33.3	°C/W
Thermal Resistance (Junction to Case)	$\theta_{j\text{-}c}$	3	°C/W

■Recommended Operating Conditions

Parameter	Symbol	Ratings	Unit	Remarks
Input Voltage	V_{IN}	*2 to 6*1	V	
Output Current	I_O	0 to 3	A	
Operating Ambient Temperature	$T_{op\,(a)}$	–20 to +85	°C	
Operating Junction Temperature	$T_{op\,(j)}$	–20 to +100	°C	
Output Voltage Variable Range	V_{OADJ}	1.2 to 5	V	Only for SI-3011ZD. Refer to the block diagram.

*1: V_{IN} (max) and I_O (max) are restricted by the relation $P_D = (V_{IN} - V_O) \times I_O$.
*2: Set the input voltage to 2.4V or higher when setting the output voltage to 2.0V or lower (SI-3011ZD).
*3: When mounted on glass-epoxy board of 40 × 40mm (copper laminate area 100%).

■Electrical Characteristics

(T_a=25°C, V_C=2V unless otherwise specified)

Parameter		Symbol	Ratings						Unit
			SI-3011ZD (Variable type)			SI-3033ZD			
			min.	typ.	max.	min.	typ.	max.	
Output Voltage (Reference Voltage V_{ADJ} for SI-3011ZD)		V_O (V_{ADJ})	1.078	1.100	1.122	3.234	3.300	3.366	V
		Conditions	V_{IN}=V_O+1V, I_O=10mA			V_{IN}=5V, I_O=10mA			
Line Regulation		ΔV_{OLINE}			10			10	mV
		Conditions	V_{IN}=3.3 to 5V, I_O=10mA (V_O=2.5V)			V_{IN}=4.5 to 5.5V, I_O=10mA			
Load Regulation		ΔV_{OLOAD}			40			40	mV
		Conditions	V_{IN}=3.3V, I_O=0 to 3A (V_O=2.5V)			V_{IN}=5V, I_O=0 to 3A			
Dropout Voltage		V_{DIF}			0.6			0.6	V
		Conditions	I_O=3A (V_O=2.5V)			I_O=3A			
Quiescent Circuit Current		Iq		1	1.5		1	1.5	mA
		Conditions	V_{IN}=V_O+1V, I_O=0A, V_C=2V			V_{IN}=5V, I_O=0A, V_C=2V			
Circuit Current at Output OFF		Iq (OFF)			1			1	μA
		Conditions	V_{IN}=V_O+1V, V_C=0V			V_{IN}=5V, V_C=0V			
Temperature Coefficient of Output Voltage		$\Delta V_O/\Delta T_a$		±0.3			±0.3		mV/°C
		Conditions	T_j=0 to 100°C			T_j=0 to 100°C			
Ripple Rejection		R_{REJ}		60			60		dB
		Conditions	V_{IN}=V_O+1V, f=100 to 120Hz, I_O=0.1A			V_{IN}=5V, f=100 to 120Hz, I_O=0.1A			
Overcurrent Protection Starting Current*2 *4		I_{S1}	3.2			3.2			A
		Conditions	V_{IN}=V_O+1V			V_{IN}=5V			
V_C Terminal	Control Voltage (Output ON)*3	V_C, IH	2			2			V
	Control Voltage (Output OFF)*3	V_C, IL			0.8			0.8	
	Control Current(Output ON)	I_C, IH			100			100	μA
		Conditions	V_C=2.7V			V_C=2.7V			
	Control Current(Output OFF)	I_C, IL	–5	0		–5	0		μA
		Conditions	V_C=0V			V_C=0V			

*1: Set the input voltage to 2.4V or higher when setting the output voltage to 2.0V or lower.
*2: I_{S1} is specified at the –5% drop point of output voltage V_O under the condition of Output Voltage parameter.
*3: Output is OFF when the output control terminal (V_C terminal) is open. Each input level is equivalent to LS-TTL level. Therefore, the device can be driven directly by LS-TTLs.
*4: These products cannot be used for the following applications because the built-in foldback-type overcurrent protection may cause errors during start-up stage.
(1) Constant current load (2) Positive and negative power supply (3) Series-connected power supply (4) V_O adjustment by raising ground voltage

■External Dimensions (TO263-5)

(Unit : mm)

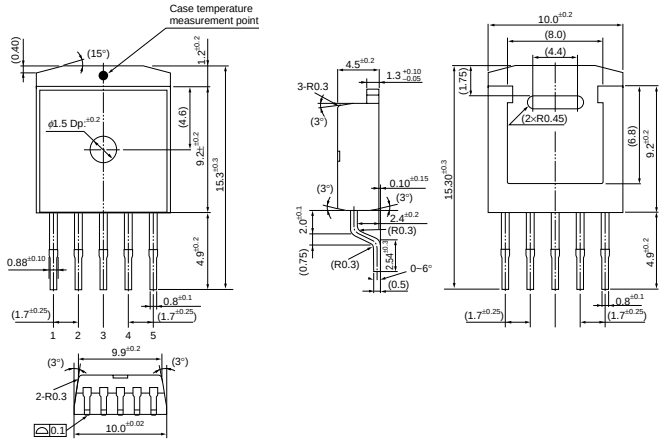

Pin Assignment
① V_C
② V_{IN}
③ GND (Common to the rear side of product)
④ V_O
⑤ Sense
(ADJ for SI-3011ZD)

Plastic Mold Package Type
Flammability: UL94V-0
Product Mass: Approx. 1.48g

■Block Diagram

SI-3011ZD

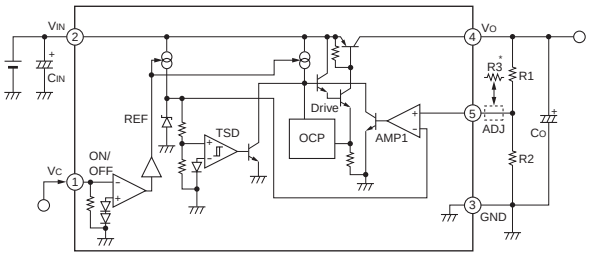

C_{IN}: Input capacitor (Approx. 10μF)
C_O: Output capacitor (47μF or larger)
The output voltage may oscillate if a low ESR type capacitor (such as a ceramic capacitor) is used for the output capacitor in the SI-3000ZD Series.

SI-3033ZD

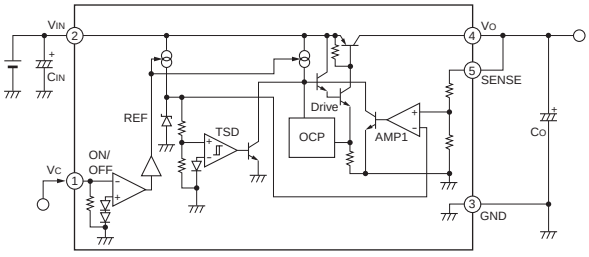

R1, R2: Output voltage setting resistors
The output voltage can be set by connecting R1 and R2 as shown at left.
The recommended value for R2 is 10kΩ or 11kΩ.

$R1 = (V_O - V_{ADJ}) / (V_{ADJ}/R2)$

*: Insert R3 in case of setting V_O to $V_O \leq 1.8V$. The recommended value for R3 is 10kΩ.

■Reference Data

Copper Laminate Area (on Glass-Epoxy Board) vs.
Thermal Resistance (from Junction to Ambient Temperature) (Typical Value)

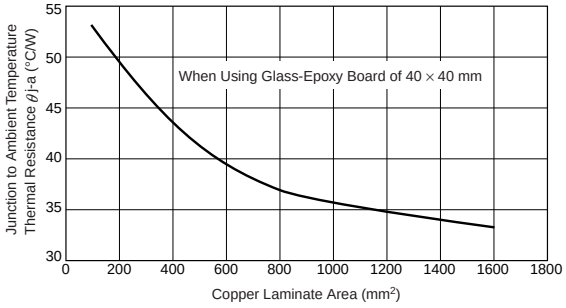

- A higher heat radiation effect can be achieved by enlarging the copper laminate area connected to the inner frame to which a monolithic IC is mounted.
- Obtaining the junction temperature
  Measure GND terminal temperature T_C with a thermocouple, etc. Then substitute this value in the following formula to obtain the junction temperature.

$T_j = P_D \times \theta_{j-C} + T_C$ $\quad P_D = (V_{IN} - V_O) \cdot I_{OUT}$

SI-3000KF Series Low Current Consumption, Low Dropout Voltage Linear Regulator ICs

■Features

- Compact full-mold package (equivalent to TO220)
- Output current: 1.0A
- Low dropout voltage: V_{DIF} ≤ 0.5V (at I_O = 1.0A)
- High ripple rejection: 75dB
- Low circuit current at output OFF: Iq (OFF) ≤ 1μA
- Built-in overcurrent and thermal protection circuits

■Applications

- Secondary stabilized power supply (local power supply)

■Absolute Maximum Ratings

(T_a=25°C)

Parameter	Symbol	Ratings	Unit	Remarks
		SI-3010KF		
DC Input Voltage	V_{IN}	35*1	V	
Output Control Terminal Voltage	Vc	V_{IN}	V	
DC Output Current	Io	1.0	A	
Power Dissipation	P_{D1}	16.6	W	With infinite heatsink
	P_{D2}	1.72	W	Without heatsink, stand-alone operation
Junction Temperature	Tj	–40 to +125	°C	
Storage Temperature	Tstg	–40 to +125	°C	
Operating Ambient Temperature	Top	–40 to +100	°C	
Thermal Resistance (Junction to Case)	θj-c	6.0	°C/W	
Thermal Resistance (Junction to Ambient Air)	θj-a	58	°C/W	Without heatsink, stand-alone operation

*1: A built-in input-overvoltage-protection circuit shuts down the output voltage at the Input Overvoltage Shutdown Voltage of the electrical characteristics.

■Recommended Operating Conditions

Parameter	Symbol	Ratings	Unit
		SI-3010KF	
Input Voltage Range	V_{IN}	2.4*2 to 27*1	V
Output Current Range	I_O	0 to 1.0*1	A
Output Voltage Variable Range	V_OADJ	1.1 to 16	V
Operating Ambient Temperature	Top	–30 to +85	°C
Operating Junction Temperature	Tj	–20 to +100	°C

*1: V_{IN} (max) and I_O (max) are restricted by the relationship P_D (max) = (V_{IN} - V_O) × I_O = 16.6W.
*2: Refer to the Dropout Voltage parameter.

■Electrical Characteristics

Parameter		Symbol	Ratings			Unit
			SI-3010KF			
			min.	typ.	max.	
Reference Voltage		V_{ADJ}	0.98	1.00	1.02	V
		Conditions	V_{IN}=7V, I_O=0.01A, V_C=2V, V_O=5A			
Line Regulation		ΔVOLINE			30	mV
		Conditions	V_{IN}=6 to 15V, I_O=0.01A, V_C=2V, V_O=5A			
Load Regulation		ΔVOLOAD			75	mV
		Conditions	V_{IN}=7V, I_O=0 to 1A, V_C=2V, V_O=5A			
Dropout Voltage		V_{DIF}			0.3	V
		Conditions	I_O=0.5A, V_C=2V, V_O=5V			
					0.5	
		Conditions	I_O=1.0A, V_C=2V, V_O=5V			
Quiescent Circuit Current		Iq			600	μA
		Conditions	V_{IN}=7V, I_O=0A, V_C=2V			
Circuit Current at Output OFF		Iq (OFF)			1	μA
		Conditions	V_{IN}=7V, V_C=0V			
Temperature Coefficient of Output Voltage		ΔVo/ΔTa		±0.5		mV/°C
		Conditions	V_{IN}=7V, I_O=0.01A, V_C=2V, Tj=0 to 100°C, V_O=2.5V			
Ripple Rejection		RREJ		75		dB
		Conditions	V_{IN}=7V, I_O=0.1A, V_C=2V, f=100 to 120Hz, V_O=5V			
Overcurrent Protection Starting Current*3		I_{S1}	1.1			A
		Conditions	V_{IN}=7V, V_C=2V			
V_C Terminal	Control Voltage (Output ON)*4	V_C, IH	2			V
		Conditions	V_{IN}=7V			
	Control Voltage (Output OFF)	V_C, IL			0.8	V
		Conditions	V_{IN}=7V			
	Control Current (Output ON)	I_C, IH			40	μA
		Conditions	V_{IN}=7V, V_C=2V			
	Control Current (Output OFF)	I_C, IL	–5	0		μA
		Conditions	V_{IN}=7V, V_C=0V			
Input Overvoltage Shutdown Voltage		V_{OVP}	33			V
		Conditions	I_O=0.01A			

*3: I_{S1} is specified at the 5% drop point of output voltage V_O on the condition that V_{IN} = overcurrent protection starting current, I_O = 10 mA.
*4: Output is OFF when the output control terminal V_C is open. Each input level is equivalent to LS-TTL level. Therefore, the device can be driven directly by LS-TTLs.
*5: SI-3000KFE cannot be used in the following applications because the built-in foldback-type overcurrent protection may cause errors during start-up stage.
(1) Constant current load (2) Positive and negative power supply (3) Series-connected power supply (4) V_O adjustment by raising ground voltage

■Block Diagram

SI-3010KF

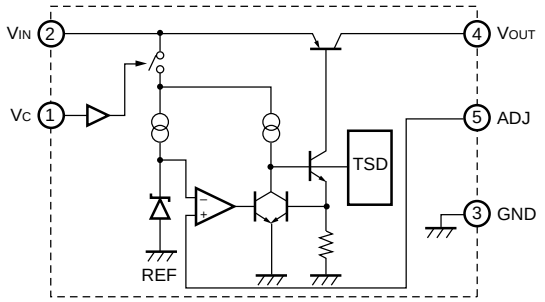

■Ta-PD Characteristics

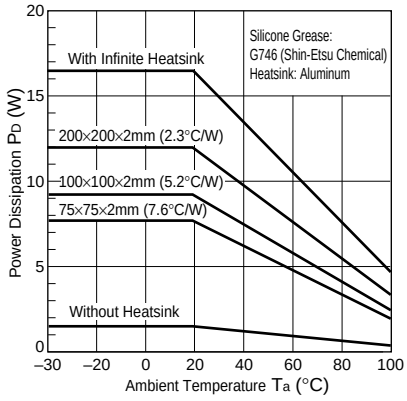

■Typical Connection Diagram

●SI-3010KF

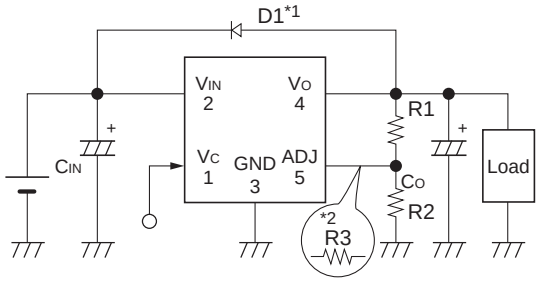

CIN: Input capacitor (22μF or larger)
CO: Output capacitor (47μF or larger)
If a low ESR capacitor (such as a ceramic capacitor) is used for the output capacitor, oscillation may occur.

*1. D1: Reverse bias protection diode
This diode is required for protection against reverse biasing between the input and output.
(Sanken RU2Z is recommended.)

R1, R2: Output voltage setting resistors
The output voltage can be adjusted by connecting R1 and R2 as shown above.
The recommended value for R2 is 10kΩ.

$R1=(V_O-V_{ADJ})\div(V_{ADJ}/R2)$

*2: Insert R3 in case of setting V_O to $V_O \leq 1.5V$.
The recommended value for R3 is 10kΩ.

■External Dimensions (TO220F-5)

(Unit : mm)

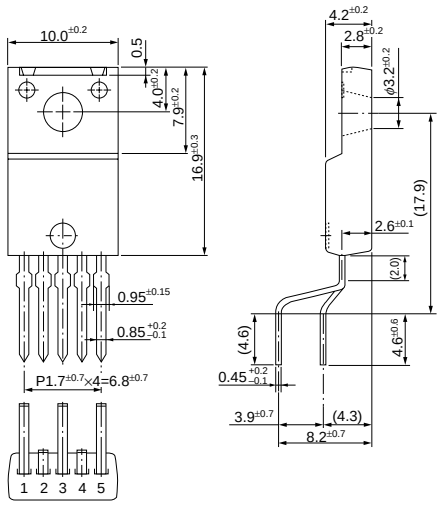

Pin Assignment
① Vc
② VIN
③ GND
④ Vout
⑤ ADJ

Plastic Mold Package Type
Flammability: UL 94V-0
Product Mass: Approx. 2.3 g

SI-3000ZF Series 5-Terminal, Low Dropout Voltage Linear Regulator ICs

■Features

- Compact full-mold package (equivalent to TO220)
- Output current: 3.0A
- Low dropout voltage: $V_{DIF} \leq 0.7V$ (at $I_O = 3.0A$)
- Low circuit current at output OFF: Iq (OFF) ≤ 1μA
- Built-in overcurrent and thermal protection circuits

■Applications

- Secondary stabilized power supply (local power supply)

■Absolute Maximum Ratings

(T_a = 25°C)

Parameter	Symbol	Ratings	Unit
DC Input Voltage	V_{IN}*1	10	V
Output Control Terminal Voltage	V_C	6	V
DC Output Current	I_O*1	3.0	A
Power Dissipation	P_{D1}	20 (With infinite heatsink)	W
	P_{D2}	1.5 (Without heatsink, stand-alone operation)	W
Junction Temperature	T_j	–30 to +125	°C
Operating Ambient Temperature	T_{op}	–30 to +100	°C
Storage Temperature	T_{stg}	–30 to +125	°C
Thermal Resistance (Junction to Case)	$\theta_{j\text{-}c}$	5.0	°C/W
Thermal Resistance (Junction to Ambient Air)	$\theta_{j\text{-}a}$	66.7 (Without heatsink, stand-alone operation)	°C/W

■Recommended Operating Conditions

Parameter	Symbol	Ratings	Unit
Input Voltage	V_{IN}	*2 to 6*1	V
Output Current	I_O	0 to 3	A
Operating Ambient Temperature	$T_{op\,(a)}$	–20 to +85	°C
Operating Junction Temperature	$T_{op\,(j)}$	–20 to +100	°C
Output Voltage Variable Range	V_{OADJ}	1.2 to 5	V

*1: V_{IN} (max) and I_O (max) are restricted by the relationship $P_D = (V_{IN} - V_O) \times I_O$.
*2: Set the input voltage to 2.4V or higher when setting the output voltage to 2.0V or lower.

■Electrical Characteristics

(T_a = 25°C, V_C = 2V unless otherwise specified)

Parameter		Symbol	SI-3011ZF min.	SI-3011ZF typ.	SI-3011ZF max.	Unit
Reference Voltage		V_{ADJ}	1.078	1.100	1.122	V
		Conditions	$V_{IN}=V_O+1V$, I_O=10mA			
Line Regulation		ΔV_{OLINE}			10	mV
		Conditions	V_{IN}=3.3 to 5V, I_O=10mA (V_O=2.5V)			
Load Regulation		ΔV_{OLOAD}			40	mV
		Conditions	V_{IN}=3.3V, I_O=0 to 3A (V_O=2.5V)			
Dropout Voltage		V_{DIF}			0.7	V
		Conditions	I_O=3A (V_O=2.5V)			
Quiescent Circuit Current		I_q		1	1.5	mA
		Conditions	$V_{IN}=V_O+1V$, I_O=0A, V_C=2V			
Circuit Current at Output OFF		I_q (OFF)			1	μA
		Conditions	$V_{IN}=V_O+1V$, V_C=0V			
Temperature Coefficient of Output Voltage		$\Delta V_O/\Delta T_a$		±0.3		mV/°C
		Conditions	T_j=0 to 100°C			
Ripple Rejection		R_{REJ}		60		dB
		Conditions	$V_{IN}=V_O+1V$, f=100 to 120Hz, I_O=0.1A			
Overcurrent Protection Starting Current*2 *4		I_{S1}	3.2			A
		Conditions	$V_{IN}=V_O+1V$			
V_C Terminal	Control Voltage (Output ON)*3	$V_{C,IH}$	2			V
	Control Voltage (Output OFF)*3	$V_{C,IL}$			0.8	V
	Control Current(Output ON)	$I_{C,IH}$			100	μA
		Conditions	V_C=2.7V			
	Control Current(Output OFF)	$I_{C,IL}$	–5	0		μA
		Conditions	V_C=0V			

*1: Set the input voltage to 2.4V or higher when setting the output voltage to 2.0V or lower.
*2: I_{S1} is specified at the 5% drop point of output voltage V_O under the Output Voltage parameter conditions.
*3: Output is OFF when the output control terminal V_C is open. Each input level is equivalent to LS-TTL level. Therefore, the device can be driven directly by LS-TTLs.
*4: These products cannot be used in the following applications because the built-in foldback-type overcurrent protection may cause errors during start-up stage.
(1) Constant current load (2) Positive and negative power supply (3) Series-connected power supply (4) V_O adjustment by raising ground voltage

■External Dimensions (TO220F-5)

(unit : mm)

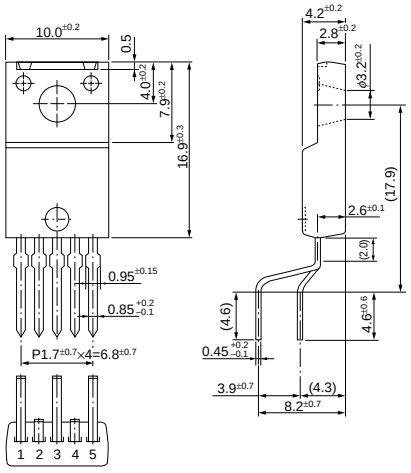

Pin Assignment
① V_C
② V_{IN}
③ GND
④ V_O
⑤ ADJ

Plastic Mold Package Type
Flammability: UL94V-0
Product Mass: Approx. 2.3g

■Typical Connection Diagram/Block Diagram

SI-3011ZF

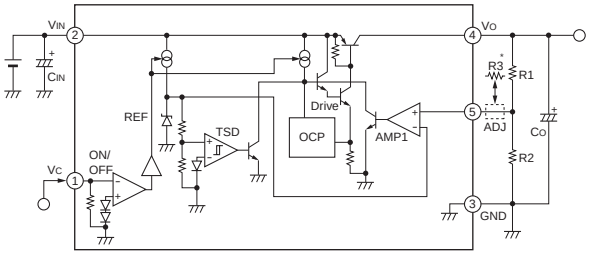

C_{IN}: Input capacitor (Approx. 10μF)
This capacitor is required when the input line contains inductance or when the wiring is long.

C_O: Output capacitor (47μF or higher)
The output voltage may oscillate if a low ESR type capacitor (such as a ceramic capacitor) is used for the output capacitor in SI-3000ZF.

R1, R2: Output voltage setting resistors
The output voltage can be set by connecting R1 and R2 as shown at left.
The recommended value for R2 is 10kΩ or 11kΩ.

$$R1 = (V_O - V_{ADJ}) / (V_{ADJ}/R2)$$

*: Insert R3 in case of setting V_O to $V_O \leq 1.8V$. The recommended value for R3 is 10kΩ.

■T_a-P_D Characteristics

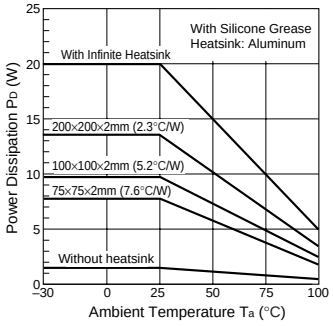

Application Note

■ Heat Dissipation and Reliability

The reliability of an IC is highly dependent on its operating temperature. Please be sure to apply silicone grease to the IC and to mount it to the heatsink with a proper mounting torque.
Heatsink design should pay particular attention to ensuring sufficient heat dissipation capacity.
In addition, please take into account the air convection in operation.
The reliability of discrete components such as capacitors and coils is closely related to temperature. A high operating temperature may reduce the service life. Exceeding the allowable temperature may burn the coils or damage capacitors. It is important to make sure that the temperature of output smoothing coils and input/output capacitors do not exceed their allowable levels during operation. With an adequate derating for the coils, minimize heat emission as far as possible. (For discrete components, refer to the individual user manuals.)

■ Internal Power Dissipation

P_D can be obtained from the following formula.

- For the device with built-in flywheel diode:

$$P_D = V_O \cdot I_O \left(\frac{100}{\eta\chi} - 1\right)$$

- For the device with external flywheel diode:

$$P_D = V_O \cdot I_O \left(\frac{100}{\eta\chi} - 1\right) - V_F \cdot I_O \left(1 - \frac{V_O}{V_{IN}}\right)$$

Efficiency $\eta\chi$ depends on the input/output conditions. Please refer to the efficiency characteristics of the devices. (Posted on the Web site.)

V_O : Output voltage
V_{IN}: Input voltage
I_O : Output current
$\eta\chi$: Efficiency(%)
V_F : Diode forward voltage

■ Thermal Design

The maximum junction temperature $T_{j(max)}$ given in the Absolute Maximum Ratings is specific to each product type and must be strictly observed. Thus, thermal design must consider the maximum power dissipation $P_{D(max)}$, which varies by the conditions of use, and the maximum ambient temperature $T_{a(max)}$.
To simplify thermal design, T_a-P_D characteristic graphs are provided herein. Please observe the following steps for heatsink design:

1. Obtain the maximum ambient temperature $T_{a(max)}$.
2. Obtain the maximum power dissipation $P_{D(max)}$.
3. Look for the intersection point on the T_a-P_D characteristic graph and determine the size of the heatsink.

Although the heatsink size is now obtained, in actual applications, 10-to-20% derating factor is generally introduced. Moreover, the heat dissipation capacity of a heatsink highly depends on how it is mounted. Thus, it is recommended to measure the heatsink and case temperature in the actual operating environment.
Please refer to the T_a-P_D characteristic graphs for respective product types.

■ Mounting Torque

SI-8000E SI-8000JF SI-8000S SI-8000TFE SI-8000HFE SI-8000FFE SI-8000Y	0.588 to 0.686[N•m] (6.0 to 7.0[kgf•cm])

■ Recommended Silicone Grease

- Shin-Etsu Chemical Co., Ltd.: G746
- Momentive Performance Materials Inc.: YG-6260
- Dow Corning Toray Silicone Co., Ltd.: SC102

Please select proper silicone grease carefully since the oil in some grease products may penetrate the device and result in an extremely short device life.

■ Others

- Devices can not be operated in parallel connection aiming for a larger current.
- Not applicable for the current boost or voltage step-up use.

■ Rectifier Diodes for Power Supplies

To rectify the AC input using rectifier diodes in power supplies, please use SANKEN rectifier diodes shown in the following list. (Please use a center-tap or bridge configuration in using stand-alone type diodes.)

Series Name	Diodes
SAI Series	SJPM-H4 (Surface-Mount Stand-Alone Type, V_{RM}=400V,I_O=2.0A)
SI-8000W Series	
SI-8000JD Series	
SI-8000TM Series	
SI-8000SD Series	
SPI-8000A Series	
SI-8005Q Series	
SI-8001FDE Series	
SI-8001FDL Series	
SI-8008HD Series	RBV-1506 (Bridge Type, V_{RM}=600V,Io=15A)
SI-8000E Series	AM01Z (Axial Type,VRM=200V,Io=1.0A)
SI-8000JF Series	
SI-8000TFE Series	
SI-8000GL Series	
SI-8000S Series	RM10Z (Axial Type,VRM=200V,Io=1.5A)
SI-8100QL Series	RM4Z (Axial Type,VRM=200V,Io=3.0A)
SI-8000FFE Series	
SI-8000HFE Series	
SI-8000Y Series	RBV-1506 (Bridge Type, V_{RM}=600V,Io=15A)
SI-8205NHD Series	RM10Z (Axial Type,VRM=200V,Io=1.5A)
STA810M Series	AM01Z (Axial Type,VRM=200V,Io=1.0A)
STA820M Series	RM10Z (Axial Type,VRM=200V,Io=1.5A)
SI-8400L Series	AM01Z (Axial Type,VRM=200V,Io=1.0A)
SI-8500L Series	

SAI Series Surface-Mount, Separate Excitation Step-down Switching Mode Regulator ICs

■Features

- Surface-mount power package
- Output current: 0.4 to 0.5A
- High efficiency: 75 to 88%
- Requires only 4 discrete components
- Internally-adjusted phase correction and output voltage
- Built-in reference oscillator (60kHz)
- Built-in overcurrent and thermal protection circuits

■Applications

- Power supplies for telecommunication equipment
- Onboard local power supplies

■Line up

Part Number	SAI01	SAI02	SAI03
V_O(V)	5.0	3.3	12.0
I_O(A)	0.5		0.4

■Absolute Maximum Ratings

Parameter	Symbol	Ratings	Unit
DC Input Voltage	V_{IN}	35	V
Power Dissipation	P_D	0.75	W
Junction Temperature	T_j	+125	°C
Storage Temperature	T_{stg}	–40 to +125	°C
Thermal Resistance(junction to case)	$\theta_{j\text{-}c}$	20	°C/W

■Recommended Operating Conditions

Parameter	Symbol	Ratings			Unit
		SAI01	SAI02	SAI03	
DC Input Voltage Range	V_{IN}	7 to 33	5.3 to 28	15 to 33	V
Output Current Range	I_O	0 to 0.5		0 to 0.4	A
Operating Junction Temperature Range	T_{jop}	–30 to +125			°C

■Electrical Characteristics

(T_a=25°C)

Parameter	Symbol	Ratings									Unit
		SAI01			SAI02			SAI03			
		min.	typ.	max.	min.	typ.	max.	min.	typ.	max.	
Output Voltage	V_O	4.80	5.00	5.20	3.17	3.30	3.43	11.40	12.00	12.60	V
	Conditions	V_{IN}=20V, I_O=0.3A			V_{IN}=15V, I_O=0.3A			V_{IN}=24V, I_O=0.3A			
Efficiency	η		80			75			88		%
	Conditions	V_{IN}=20V, I_O=0.3A			V_{IN}=15V, I_O=0.3A			V_{IN}=24V, I_O=0.3A			
Oscillation Frequency	f		60			60			60		kHz
	Conditions	V_{IN}=20V, I_O=0.3A			V_{IN}=15V, I_O=0.3A			V_{IN}=24V, I_O=0.3A			
Line Regulation	ΔV_{OLINE}		80	100		60	80		100	130	mV
	Conditions	V_{IN}=10 to 30V, I_O=0.3A			V_{IN}=8 to 28V, I_O=0.3A			V_{IN}=18 to 30V, I_O=0.3A			
Load Regulation	ΔV_{OLOAD}		30	40		20	30		70	95	mV
	Conditions	V_{IN}=20V, I_O=0.1 to 0.4A			V_{IN}=15V, I_O=0.1 to 0.4A			V_{IN}=24V, I_O=0.1 to 0.4A			
Temperature Coefficient of Output Voltage	$\Delta V_O/\Delta T_a$		±0.5			±0.5			±1.5		mV/°C
Ripple Rejection	R_{REJ}		45			45			45		dB
	Conditions	f=100 to 120Hz			f=100 to 120Hz			f=100 to 120Hz			
Overcurrent Protection Starting Current	I_{S1}	0.55			0.55			0.45			A
	Conditions	V_{IN}=10V			V_{IN}=8V			V_{IN}=18V			

■External Dimensions (PS4)

(unit : mm)

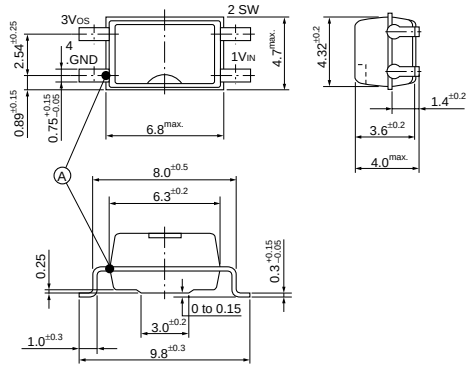

Ⓐ Case Temperature Measuring Point

Pin Assignment
① V_{IN}
② SW_{OUT}
③ V_{OS}
④ GND

Plastic Mold Package Type
Flammability: UL94V-0
Product Mass: Approx. 0.22g

■Block Diagram

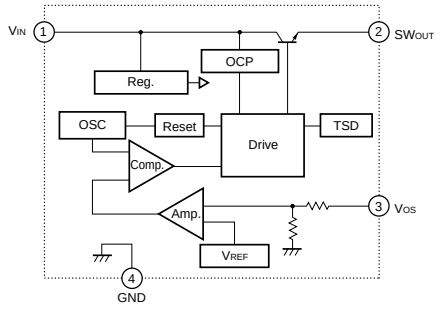

■Typical Connection Diagram

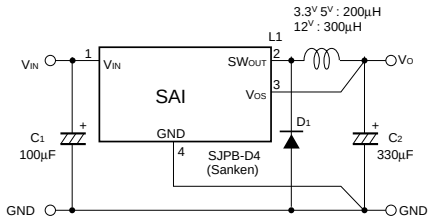

■T_a-P_D Characteristics

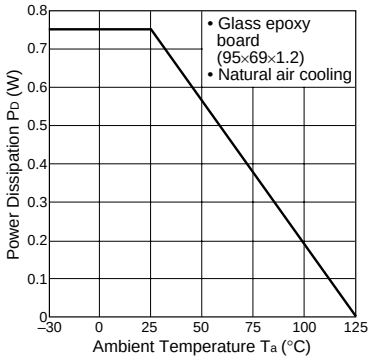

$$P_D = V_O \cdot I_O \left(\frac{100}{\eta\chi} - 1 \right) - V_F \cdot I_O \left(1 - \frac{V_O}{V_{IN}} \right)$$

The efficiency depends on the input voltage and the output current. Therefore, obtain the value from the efficiency graph and substitute the percentage in the formula above.

V_O : Output voltage
I_O : Output current
$\eta\chi$: Efficiency (%)
V_F : Diode D_1 forward voltage
SJPB-D4-0.3V

Thermal design for D_1 must be considered separately.

SI-8000W Series Surface-Mount, Separate Excitation Step-down Switching Mode Regulator ICs

■Features

- Surface-mount package (SOP8)
- Output current: 0.6A
- High efficiency: 75 to 80%
- Requires only 4 discrete components
- Internally-adjusted phase correction and output voltage adjustment performed internally
- Built-in reference oscillator (60kHz)
- Built-in overcurrent and thermal protection circuits

■Absolute Maximum Ratings

Parameter	Symbol	Ratings	Unit
DC Input Voltage	V_{IN}	35	V
Power Dissipation	P_D	1	W
Junction Temperature	T_j	–30 to +125	°C
Storage Temperature	T_{stg}	–40 to +125	°C
Thermal Resistance (Junction to 7-Pin Lead)	$\theta_{j\text{-}L}$	22	°C/W
Thermal Resistance (Junction to Ambient Air)*1	$\theta_{j\text{-}a}$	100	°C/W

*1: Glass-epoxy board of 40 × 40mm (copper laminate area 4.3%)

■Applications

- Power supplies for telecommunication equipment
- Onboard local power supplies

■Recommended Operating Conditions

Parameter	Symbol	Ratings		Unit
		SI-8033W	SI-8050W	
DC Input Voltage Range	V_{IN}	5.3 to 28	7 to 33	V
Output Current Range	I_O	0 to 0.6		A
Operating Junction Temperature Range	T_{jop}	–30 to +125		°C

■Electrical Characteristics

(T_a=25°C)

Parameter	Symbol	Ratings						Unit
		SI-8033W			SI-8050W			
		min.	typ.	max.	min.	typ.	max.	
Output Voltage	V_O	3.17	3.30	3.43	4.80	5.00	5.20	V
	Conditions	V_{IN}=15V, I_O=0.3A			V_{IN}=20V, I_O=0.3A			
Efficiency	η		75			80		%
	Conditions	V_{IN}=15V, I_O=0.3A			V_{IN}=20V, I_O=0.3A			
Oscillation Frequency	f		60			60		kHz
	Conditions	V_{IN}=15V, I_O=0.3A			V_{IN}=20V, I_O=0.3A			
Line Regulation	ΔV_{OLINE}		60	80		80	100	mV
	Conditions	V_{IN}=8 to 28V, I_O=0.3A			V_{IN}=10 to 30V, I_O=0.3A			
Load Regulation	ΔV_{OLOAD}		20	30		30	40	mV
	Conditions	V_{IN}=15V, I_O=0.1 to 0.4A			V_{IN}=20V, I_O=0.1 to 0.4A			
Temperature Coefficient of Output Voltage	$\Delta V_O/\Delta T_a$		±0.5			±0.5		mV/°C
Ripple Rejection	R_{REJ}		45			45		dB
	Conditions	f=100 to 120Hz			f=100 to 120Hz			
Overcurrent Protection Starting Current	I_{S1}	0.61			0.61			A
	Conditions	V_{IN}=15V			V_{IN}=20V			

■External Dimensions (SOP8)

(Unit : mm)

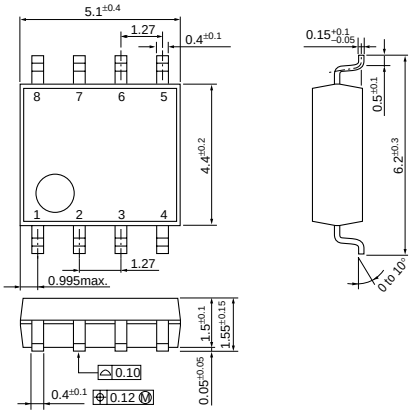

Pin Assignment
① V_{IN}
② N.C
③ SW_{OUT}
④ V_{OS}
⑤ GND
⑥ GND
⑦ GND
⑧ GND

Plastic Mold Package Type
Flammability: UL94V-0
Product Mass: Approx. 0.1g

■Block Diagram

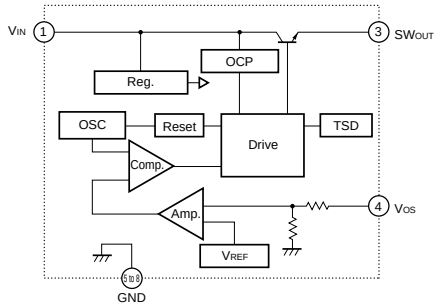

■Typical Connection Diagram

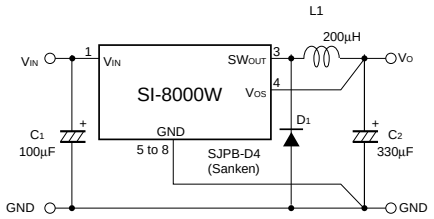

■Reference Data

Copper Laminate Area vs. Power Dissipation

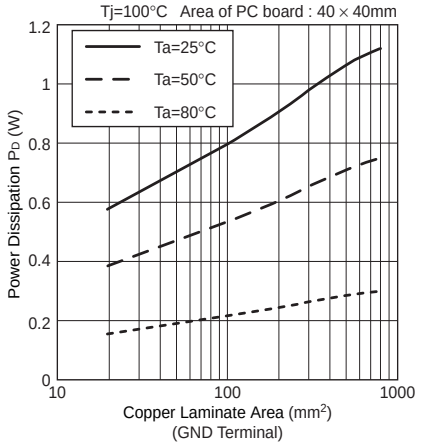

Copper Laminate Area vs. Thermal Resistance $\theta_{j\text{-}a}$

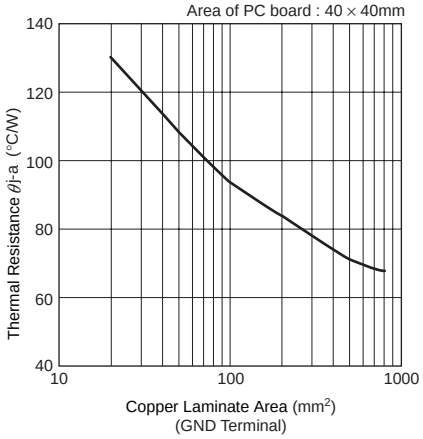

SI-8000JD Series Surface-Mount, Separate Excitation Step-down Switching Mode Regulator ICs

■Features

- Surface-mount package (TO263-5)
- Output current: 1.5A
- High efficiency: 77 to 88%
- Requires only 4 discrete components
- Internally-adjusted phase correction and output voltage
- Capable of downsizing a choke-coil due to IC's high switching frequency (125 kHz). (Compared with conventional Sanken devices)
- Built-in foldback-overcurrent and thermal protection circuits
- Output ON/OFF available (Circuit current at output OFF: 200μA max)
- Soft start available by ON/OFF pin Conditions

■Lineup

Part Number	SI-8033JD	SI-8050JD	SI-8090JD	SI-8120JD
V_O(V)	3.3	5.0	9.0	12.0
I_O(A)	1.5			

■Absolute Maximum Ratings

Parameter	Symbol	Ratings	Unit	Conditions
DC Input Voltage	V_{IN}	43	V	
Output Current	I_O	1.5	A	
Power Dissipation*	P_D	3	W	When mounted on glass-epoxy board 40 × 40 mm (copper area 100%)
Junction Temperature	T_j	+125	°C	
Storage Temperature	T_{stg}	–40 to +125	°C	
Thermal Resistance (Junction to Case)	$\theta_{j\text{-}c}$	3	°C/W	
Thermal Resistance (Junction to Ambient Air)	$\theta_{j\text{-}a}$	33.3	°C/W	When mounted on glass-epoxy board 40 × 40 mm (copper area 100%)

*: Limited by thermal protection circuit

■Applications

- Power supplies for telecommunication equipment
- Onboard local power supplies, etc.

■Recommended Operating Conditions

Parameter	Symbol	Ratings				Unit	Conditions
		SI-8033JD	SI-8050JD	SI-8090JD	SI-8120JD		
DC Input Voltage Range	V_{IN1}	5.3 to 40	7 to 40	11 to 40	14 to 40	V	I_O=0 to 1A
	V_{IN2}	6.3 to 40	8 to 40	12 to 40	15 to 40		I_O=0 to 1.5A
DC Output Current Range*	I_O	0 to 1.5				A	V_{IN}≥V_O+3V
Operating Junction Temperature Range	T_{jop}	–30 to +125				°C	
Operating Temperature Range*	T_{op}	–30 to +125				°C	

*: Limited by Ta–P_D characteristics

■Electrical Characteristics

(T_a=25°C)

Parameter		Symbol	Ratings												Unit
			SI-8033JD			SI-8050JD			SI-8090JD			SI-8120JD			
			min.	typ.	max.	min.	typ.	max.	min.	typ.	max.	min.	typ.	max.	
Output Voltage		V_O	3.234	3.30	3.366	4.90	5.00	5.10	8.82	9.00	9.18	11.76	12.00	12.24	V
		Conditions	V_{IN}=15V, I_O=0.5A			V_{IN}=20V, I_O=0.5A			V_{IN}=21V, I_O=0.5A			V_{IN}=24V, I_O=0.5A			
Efficiency		η		77			82			86			88		%
		Conditions	V_{IN}=15V, I_O=0.5A			V_{IN}=20V, I_O=0.5A			V_{IN}=21V, I_O=0.5A			V_{IN}=24V, I_O=0.5A			
Oscillation Frequency		f		125			125			125			125		kHz
		Conditions	V_{IN}=15V, I_O=0.5A			V_{IN}=20V, I_O=0.5A			V_{IN}=21V, I_O=0.5A			V_{IN}=24V, I_O=0.5A			
Line Regulation		ΔV_{OLINE}		25	80		40	100		50	120		60	130	mV
		Conditions	V_{IN}=8 to 30V, I_O=0.5A			V_{IN}=10 to 30V, I_O=0.5A			V_{IN}=15 to 30V, I_O=0.5A			V_{IN}=18 to 30V, I_O=0.5A			
Load Regulation		ΔV_{OLOAD}		10	30		10	40		10	40		10	40	mV
		Conditions	V_{IN}=15V, I_O=0.2 to 0.8A			V_{IN}=20V, I_O=0.2 to 0.8A			V_{IN}=21V, I_O=0.2 to 0.8A			V_{IN}=24V, I_O=0.2 to 0.8A			
Temperature Coefficient of Output Voltage		$\Delta V_O/\Delta T_a$		±0.5			±0.5			±1.0			±1.0		mV/°C
Overcurrent Protection Starting Current		I_{S1}	1.6			1.6			1.6			1.6			A
		Conditions	V_{IN}=15V			V_{IN}=20V			V_{IN}=21V			V_{IN}=24V			
ON/OFF* Pin	Low Level Voltage	V_{SSL}			0.5			0.5			0.5			0.5	V
	Outflow Current at Low Voltage	I_{SSL}			100			100			100			100	μA
		Conditions	V_{SSL}=0V												
Quiescent Circuit Current		I_q		7			7			7			7		mA
		Conditions	V_{IN}=15V, Io=0A			V_{IN}=20V, Io=0A			V_{IN}=21V, Io=0A			V_{IN}=24V, Io=0A			
		$I_{q(OFF)}$			200			200			200			200	μA
		Conditions	V_{IN}=15V, $V_{ON/OFF}$=0.3V			V_{IN}=20V, $V_{ON/OFF}$=0.3V			V_{IN}=21V, $V_{ON/OFF}$=0.3V			V_{IN}=24V, $V_{ON/OFF}$=0.3V			

*: Pin 5 is the ON/OFF pin. Soft start at power on can be performed with a capacitor connected to this pin.
The output can also be turned ON/OFF with this pin.
The output is stopped by setting the voltage of this pin to V_{SSL} or lower.
ON/OFF-pin voltage can be changed with an open-collector drive circuit of a transistor.
When using both the soft-start and ON/OFF functions together, the discharge current from C_3 flows into the ON/OFF control transistor. Therefore, limit the current securely to protect the transistor if C_3 capacitance is large.
The ON/OFF pin is pulled up to the power supply in the IC, so applying the external voltage is prohibited.

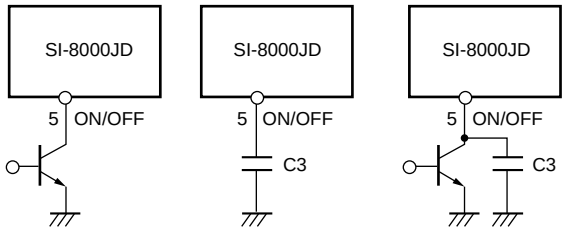

$V_{OUT.}$ ON/OFF | Soft Start | Soft Start +$V_{OUT.}$ ON/OFF

■External Dimensions (TO263-5)

(Unit : mm)

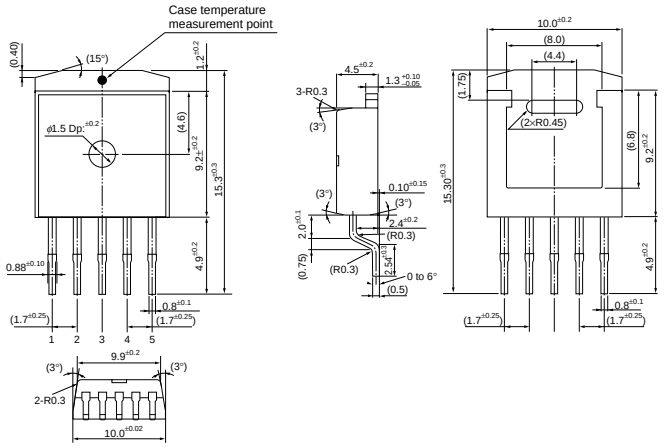

Pin Assignment
① V_{IN}
② SW_{OUT}
③ GND
④ V_{OS}
⑤ ON/OFF

Plastic Mold Package Type
Flammability: 94V-0
Product Mass: Approx. 1.48g

■Block Diagram

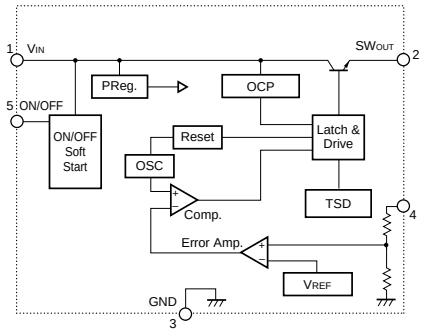

■Typical Connection Diagram

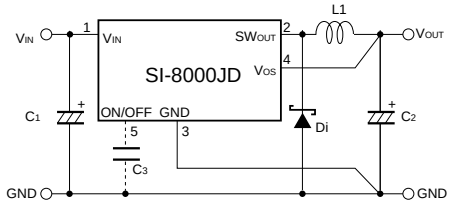

C_1 : 50V/220μF
C_2 : 25V/470μF
C_3 : 10V/0.47μF (Only when using soft-start function)
L_1 : 100μH
Di : SJPB-H6 (Sanken)

■Reference Data

Copper Laminate Area on Glass Epoxy Board vs. Thermal Resistance (Junction to Ambient Air) (Typical Value)

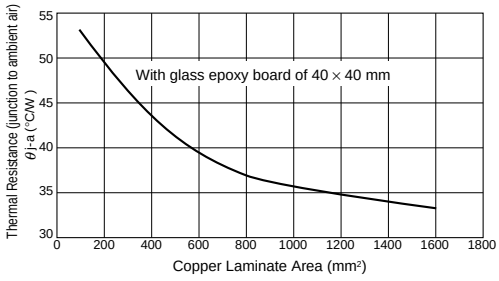

Output Current vs. Power Dissipation (Typical)

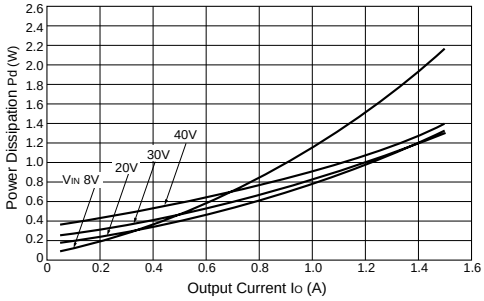

■T_a-P_D Characteristics

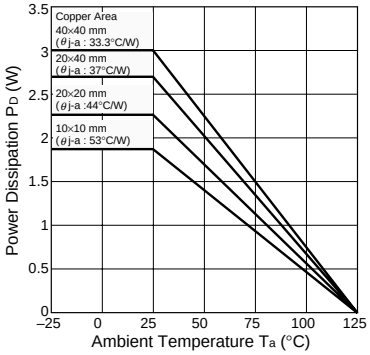

$$P_D = V_O \cdot I_O \left(\frac{100}{\eta\chi} - 1\right) - V_F \cdot I_O \left(1 - \frac{V_O}{V_{IN}}\right)$$

The efficiency depends on the input voltage and the output current. Therefore, obtain the value from the efficiency graph and substitute the percentage in the formula above.

V_O : Output Voltage
V_{IN} : Input Voltage
I_O : Output Current
$\eta\chi$: Efficiency (%)
V_F : D_1 forward voltage
0.4V(I_O=2A)(SJPB-H6)

Thermal design for D_1 must be considered separately.

SI-8000TM Series Surface-Mount, Separate Excitation Step-down Switching Mode Regulator ICs

■Features

- Compact surface-mount package (TO252-5)
- Output current: 1.5 A
- High efficiency: 81% typ. (at Vo = 5 V)
- Requires only 4 discrete components
- Built-in reference oscillator (300 kHz)
- Built-in drooping-type-overcurrent and thermal protection circuits
- Output ON/OFF available (circuit current at output OFF: 200 μA typ.)
- Soft start available by ON/OFF pin

■Applications

- Onboard local power supplies
- AV equipment
- OA equipment

■Absolute Maximum Ratings

Parameter	Symbol	Ratings	Unit	Conditions
DC Input Voltage	V_{IN}	43	V	
Power Dissipation	P_{D1}	1.06	W	When mounted on glass-epoxy board (900 mm² copper area 4.3%)
	P_{D2}	1.65		When mounted on glass-epoxy board (900 mm² copper area 50%)
Junction Temperature*	T_j	–30 to +150	°C	
Storage Temperature	T_{stg}	–40 to +150	°C	
Thermal Resistance (Junction to Case)	$\theta_{j\text{-}c}$	6	°C/W	
Thermal Resistance (Junction to Ambient Air)	$\theta_{j\text{-}a}$	95	°C/W	When mounted on glass-epoxy board (900 mm² copper area 4.3%)

*: This product has built-in thermal protection circuits that may operate when the junction temperature rises above 130°C.
The recommended design for the junction temperature during operation is below 125°C.

■Recommended Operating Conditions

Parameter	Symbol	Ratings	Unit
		SI-8008TM	
Input Voltage Range	V_{IN}	V_O+3*1 to 40	V
Output Voltage	V_O	0.8 to 24	V
Output Current Range	I_O	0 to 1.5	A
Operating Junction Temperature Range	T_{jop}	–20 to +125	°C
Operating Temperature Range	T_{op}	–20 to +125	°C

*1: The minimum value of an input voltage range is the higher of 4.5 V or V_O + 3 V.

■Electrical Characteristics

(T_a=25°C)

Parameter		Symbol		Rating SI-8008TM min.	typ.	max.	Unit
Reference Voltage		V_{ADJ}		0.784	0.800	0.816	V
			Conditions	V_{IN}=15V, I_o=0.1A			
Temperature Coefficient of Reference Voltage		$\Delta V_{ADJ}/\Delta T$			±0.1		mV/°C
			Conditions	V_{IN}=15V, I_o=0.1A, T_c=0 to 100°C			
Efficiency		η			81		%
			Conditions	V_{IN}=15V, I_o=0.5A			
Oscillation Frequency		fo			300		kHz
			Conditions	V_{IN}=15V, I_o=0.5A			
Line Regulation		ΔV_{OLINE}			60	80	mV
			Conditions	V_{IN}=10 to 30V, I_o=0.5A			
Load Regulation		ΔV_{OLOAD}			10	40	mV
			Conditions	V_{IN}=15V, I_o=0.2 to 1.5A			
Overcurrent Protection Starting Current		I_S		1.6			A
			Conditions	V_{IN}=15V			
ON/OFF Pin*	Low Level Voltage	V_{SSL}				0.5	V
	Outflow Current at Low Voltage	I_{SSL}			10	40	μA
			Conditions	V_{SSL}=0V			
Quiescent Circuit Current		I_q			6		mA
			Conditions	V_{IN}=15V, I_o=0A			
		$I_{q\ (OFF)}$			200	400	μA
			Conditions	V_{IN}=15V, V_{SS}=0V			

*: Pin 5 is the SS pin. Soft start at power on can be performed with a capacitor connected to this pin. The output can also be turned ON/OFF with this pin.
The output is stopped by setting the voltage of this pin to VSSL or lower. SS-pin voltage can be changed with an open-collector drive circuit of a transistor. When using both the soft-start and ON/OFF functions together, the discharge current from C3 flows into the ON/OFF control transistor. Therefore, limit the current securely to protect the transistor if C3 capacitance is large. The SS pin is pulled up to the power supply in the IC, so applying the external voltage is prohibited. If the pin is not used, leave it open.

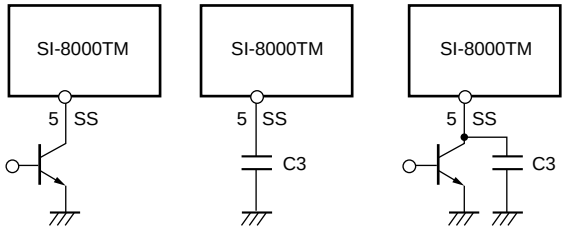

V_O. ON/OFF | Soft start | Soft start +V_O. ON/OFF

■External Dimensions (TO252-5)

(Unit : mm)

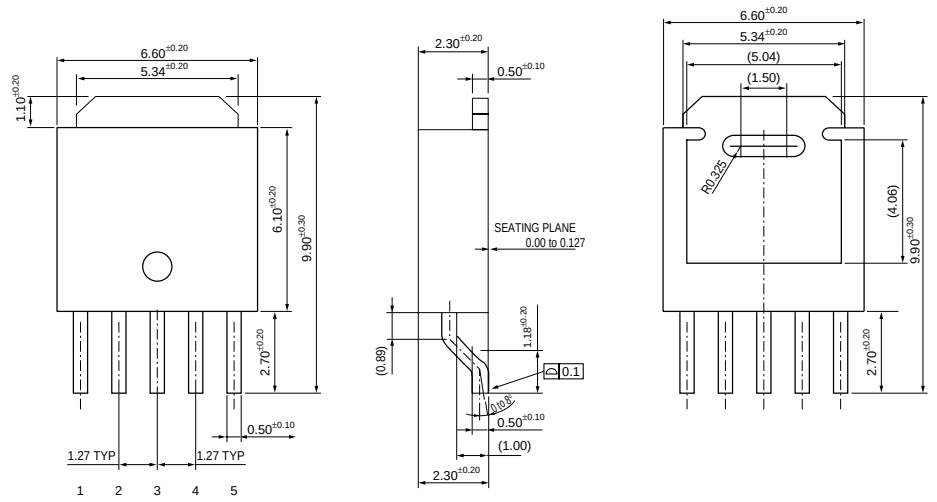

Pin Assignment
① V_{IN}
② SW
③ GND
④ ADJ
⑤ SS

Plastic Mold Package Type
Flammability: UL94V-0
Product Mass: Approx. 0.33 g

■Block Diagram

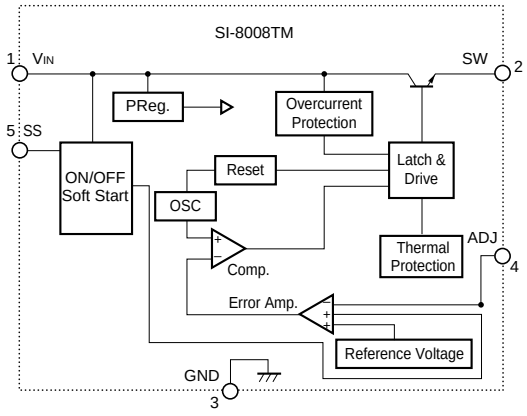

■Typical Connection Diagram

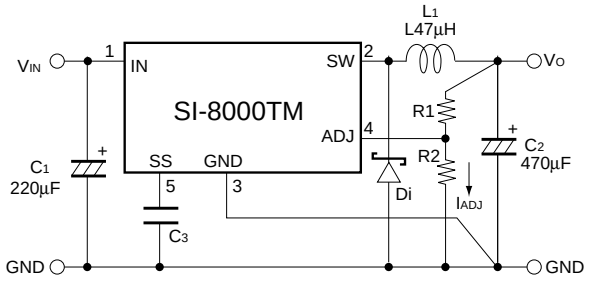

C_1 : 220μF
C_2 : 470μF
C_3 : 1μF (Only when using soft-start function)
L_1 : 47μF
Di : SJPB-H6 (Sanken)

SI-8000SD Series Surface Mount, Separate Excitation Step-down Switching Mode Regulator ICs

■Features

- Surface-mount package (TO263-5)
- Output current: 3.0A
- High efficiency: 79% typ. (SI-8033SD), 84% typ. (SI-8050SD)
- Requires only 4 discrete external components
- Internally-adjusted phase correction and output voltage
- Built-in reference oscillator (60kHz)
- Built-in overcurrent and thermal protection circuits
- Output ON/OFF available
- Soft start available by S.S pin

■Applications

- Power supplies for telecommunication equipment
- Onboard local power supplies

■Lineup

Part Number	SI-8033SD	SI-8050SD
V_O (V)	3.3	5.0
I_O (A)	3	

■Absolute Maximum Ratings

Parameter	Symbol	Ratings	Unit	Conditions
DC Input Voltage	V_{IN}	43*1	V	
Power Dissipation*2	P_D	3	W	When mounted on glass-epoxy board 40 × 40 mm (copper area: 100%)
Junction Temperature	T_j	+125	°C	
Storage Temperature	T_{stg}	–40 to +125	°C	
Thermal Resistance (Junction to Case)	$\theta_{j\text{-}c}$	3	°C/W	
Thermal Resistance (Junction to Ambient Air)	$\theta_{j\text{-}a}$	33.3	°C/W	When mounted on glass-epoxy board 40 × 40 mm (copper area: 100%)

*1: 35V for SI-8033SD
*2: Limited by thermal protection circuit.

■Recommended Operating Conditions

Parameter	Symbol	Ratings		Unit
		SI-8033SD	SI-8050SD	
DC Input Voltage Range	V_{IN1}	5.5 to 28	7 to 40	V
Output Current Range*	I_O	0 to 3.0		A
Operating Junction Temperature Range	T_{jop}	–30 to +125		°C
Operating Temperature Range*	T_{op}	–30 to +125		°C

*: Limited by Ta-P_D characteristics.

■Electrical Characteristics

(T_a=25°C)

Parameter		Symbol	Ratings						Unit
			SI-8033SD			SI-8050SD			
			min.	typ.	max.	min.	typ.	max.	
Output Voltage		V_O	3.17	3.3	3.43	4.8	5.0	5.2	V
		Conditions	V_{IN}=15V, I_O=1A			V_{IN}=20V, I_O=1A			
Efficiency		η		79			84		%
		Conditions	V_{IN}=15V, I_O=1A			V_{IN}=20V, I_O=1A			
Oscillation Frequency		f		60			60		kHz
		Conditions	V_{IN}=15V, I_O=1A			V_{IN}=20V, I_O=1A			
Line Regulation		ΔV_{OLINE}		25	80		40	100	mV
		Conditions	V_{IN}=8 to 28V, I_O=1A			V_{IN}=10 to 30V, I_O=1A			
Load Regulation		ΔV_{OLOAD}		10	30		10	40	mV
		Conditions	V_{IN}=15V, I_O=0.5 to 1.5A			V_{IN}=20V, I_O=0.5 to 1.5A			
Temperature Coefficient of Output Voltage		$\Delta V_O/\Delta T_a$		±0.5			±0.5		mV/°C
Overcurrent Protection Starting Current		I_{S1}	3.1			3.1			A
		Conditions	V_{IN}=15V			V_{IN}=20V			
Soft Start Pin*	Low-Level Voltage	V_{SSL}		0.2			0.2		V
	Outflow Current at Low Voltage	I_{SSL}	20	30	40	20	30	40	μA
		Conditions	V_{SSL}=0.2V						

* Pin 5 is a soft start pin. Soft start at power on can be performed with a capacitor connected to this pin.
The output can also be turned ON/OFF with this pin.
The output is stopped by setting the voltage of this pin to V_{SSL} or lower.
Soft-start pin voltage can be changed with an open-collector drive circuit of a transistor.
When using both the soft-start and ON/OFF functions together, the discharge current from C_3 flows into the ON/OFF control transistor. Therefore, limit the current securely to protect the transistor if C_3 capacitance is large.
The ON/OFF pin is pulled up to the power supply in the IC, so applying the external voltage is prohibited.
If this pin is not used, leave it open.

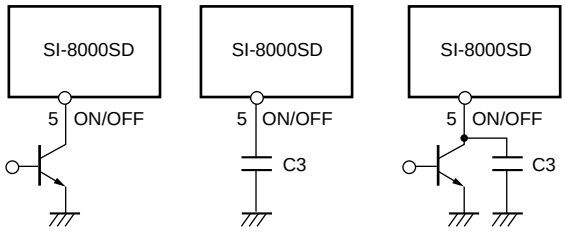

$V_{OUT.}$ ON/OFF | Soft start | Soft start +$V_{OUT.}$ ON/OFF

■External Dimensions (TO263-5)

(Unit : mm)

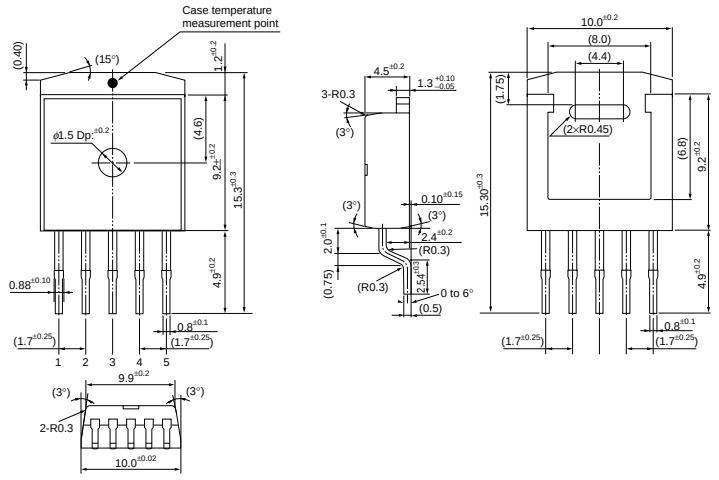

Pin Assignment
① VIN
② SWOUT
③ GND
④ VOS
⑤ S.S

Plastic Mold Package Type
Flammability: 94V-0
Product Mass: Approx. 1.48g

■Block Diagram

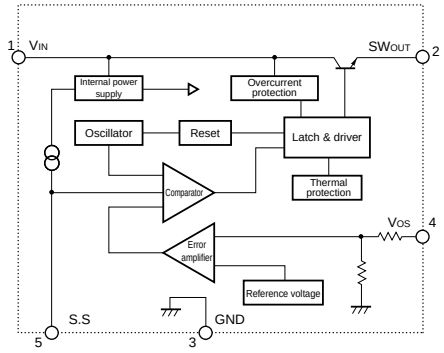

■Reference Data

Copper Laminate Area on Glass Epoxy Board vs. thermal resistance (junction to ambient air) (Typical Value)

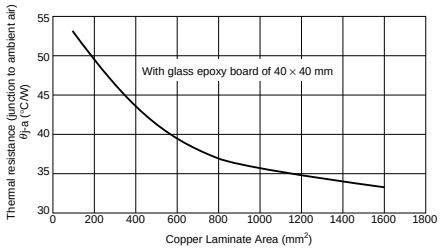

■Typical Connection Diagram

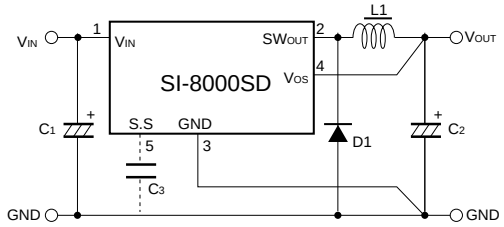

C1 : 50V/1000μF
C2 : 50V/1000μF
C3 : 0.01μF
(only when soft start function is used)
L1 : 150μH
D1 : SPB-G56 (Sanken)

Diode D1
- Be sure to use Schottky-barrier diode as D1.
  If other diodes like fast recovery diodes are used, ICs may be destroyed because of the reverse voltage generated by the recovery voltage or ON voltage.

Choke coil L1
- If the winding resistance of the choke coil is too high, the efficiency may drop below the rated value.
- As the overcurrent protection starting current is about 3.5 A, take care concerning heat radiation from the choke coil caused by magnetic saturation due to overload or short-circuited load.

Capacitors C1, C2, and C3
- As large ripple currents flow through C1 and C2, use high-frequency and low-impedance capacitors aiming for switching-mode-power-supply use. Especially when the impedance of C2 is high, the switching waveform may become abnormal at low temperatures.
  For C2, do not use a capacitor with an extremely low equivalent series resistance (ESR) such as an OS capacitor or a tantalum capacitor, which may cause an abnormal oscillation.
- C3 is a capacitor for soft start. Leave pin 5 open if the soft start function is not used.
  This pin is pulled up with a pull-up resistor inside the ICs.

◎To create the optimum operating conditions, place the components as close as possible to each other.

SPI-8000A Series Surface Mount, Separate Excitation Step-down Switching Mode Regulator ICs

■Features

- Surface-mount 16 pin package
- Output current: 3.0A
- High efficiency: 91% (at V_{IN} = 10V, I_O = 1A, V_O = 5V)
- Capable of downsizing a choke-coil due to IC's high switching frequency (125kHz). (Compared with conventional Sanken devices)
- The output-voltage-variable type can vary its output voltage from 1V to 14V because of its low reference voltage (Vref) of 1V.
- Wide Input Voltage Range (8 to 50V)
- Output ON/OFF available
- Built-in overcurrent and thermal protection circuits

■Absolute Maximum Ratings

(T_a=25°C)

Parameter	Symbol	Ratings	Unit
DC Input Voltage	V_{IN}	53	V
Power Dissipation	P_D *1, *2	2.4	W
Junction Temperature	T_j	+125	°C
Storage Temperature	T_{stg}	–40 to +125	°C
Thermal Resistance (junction to case)	$\theta_{j\text{-}c}$ *2	18	°C/W
Thermal Resistance (junction to ambient air)	$\theta_{j\text{-}a}$ *2	50	°C/W

*1: Limited due to thermal protection.
*2: When mounted on glass-epoxy board 700cm^2 (copper laminate area 30.8cm^2).

■Applications

- Onboard local power supplies
- OA equipment
- For stabilization of the secondary-side output voltage of switching power supplies

■Recommended Operating Conditions

Parameter	Symbol	Ratings	Unit
		SPI-8010A	
DC Input Voltage Range	V_{IN}	(8 or V_o+3)*1 to 50	V
Output Voltage Range	V_O	1 to 14	V
Output Current Range	I_O	0.02 to 3.0*2	A
Operating Junction Temperature Range	T_{jop}	–30 to +125	°C
Operating Temperature Range	T_{op}	–30 to +125	°C

*1: The minimum value of an input voltage range is the higher of either 8V or V_O+3V.
*2: Please be sure to let the output current run more than 20 mA. When using by less than 20 mA, there is a possibility that the output voltage becomes unstable.

■Electrical Characteristics

(T_a=25°C)

Parameter		Symbol	Rating			Unit
			SPI-8010A (Variable type)			
			min.	typ.	max.	
Reference Voltage		V_{REF}	0.97	1.00	1.03	V
		Conditions	V_{IN}=12V, I_O=1A			
Efficiency		Eff		86		%
		Conditions	V_{IN}=20V, I_O=1A, V_O=5V			
Oscillation Frequency		F_{OSC}		250		kHz
		Conditions	V_{IN}=12V, I_O=1A			
Line Regulation		ΔV_{OLINE}		20	40	mV
		Conditions	V_{IN}=10 to 30V, I_O=1A			
Load Regulation		ΔV_{OLOAD}		10	30	mV
		Conditions	V_{IN}=12V, I_O=0.1 to 1.5A			
Temperature Coefficient of Reference Voltage		$\Delta V_{REF}/\Delta T_a$		±0.5		mV/°C
Overcurrent Protection Starting Current		I_S	3.1			A
		Conditions	V_{IN}=12V			
Quiescent Circuit Current		I_q		7		mA
		Conditions	V_{IN}=12V, I_O=0A			
Circuit Current at Output OFF		$I_{q(off)}$			400	μA
		Conditions	V_{IN}=12V, $V_{ON/OFF}$=0.3V			
CE/SS Terminal	Low Level Voltage	V_{SSL}			0.5	V
	Outflow Current at Low Voltage	I_{SSL}			50	μA
		Conditions	V_{SSL}=0V			

* Pin 4 is the CE/SS pin. Soft start at power on can be performed with a capacitor connected to this pin. The output can also be turned ON/OFF with this pin. The output is stopped by setting the voltage of this pin to V_{SSL} or lower. CE/SS-pin voltage can be changed with an open-collector drive circuit of a transistor. When using both the soft-start and ON/OFF functions together, the discharge current from C_4 flows into the ON/OFF control transistor. Therefore, limit the current securely to protect the transistor if C_3 capacitance is large.
The CE/SS pin is pulled up to the power supply in the IC, so applying the external voltage is prohibited.

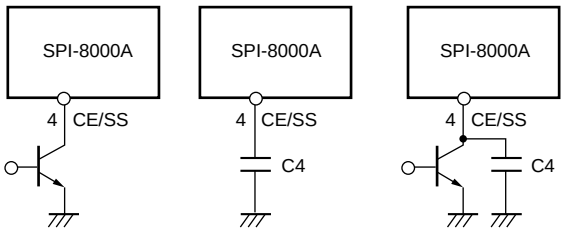

V_O. ON/OFF | Soft start | Soft start +V_O. ON/OFF

■External Dimensions (HSOP16)

(Unit : mm)

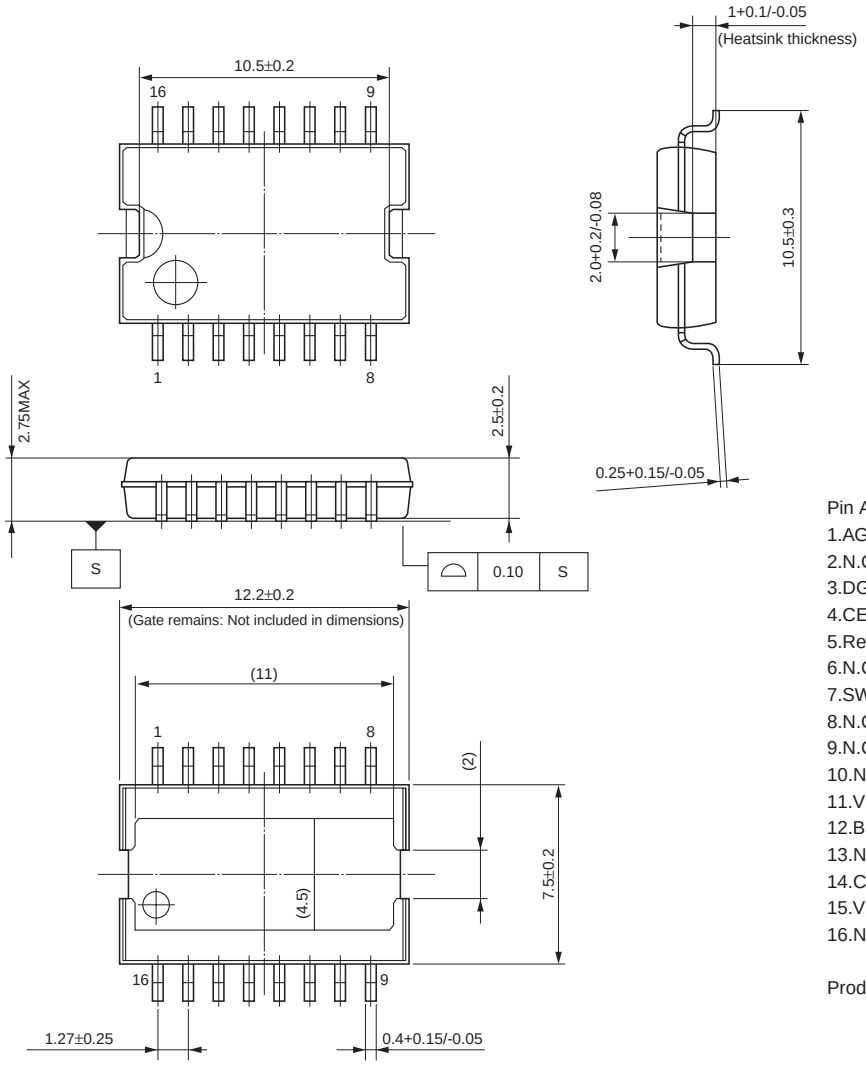

Pin Assignment
1.AGND
2.N.C
3.DGND
4.CE/SS
5.Reg
6.N.C
7.SW_{OUT}
8.N.C
9.N.C
10.N.C
11.V_{IN}
12.B.S
13.N.C
14.C_{omp}
15.V_{REF}
16.N.C

Product Mass : Approx 0.86g

■Block Diagram

SPI-8010A

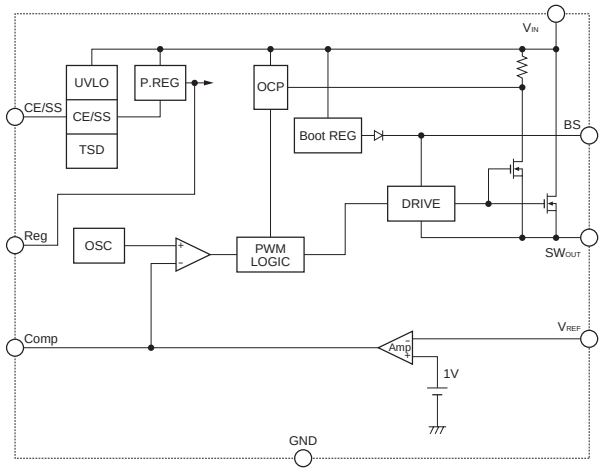

■Typical Connection Diagram

SPI-8010A

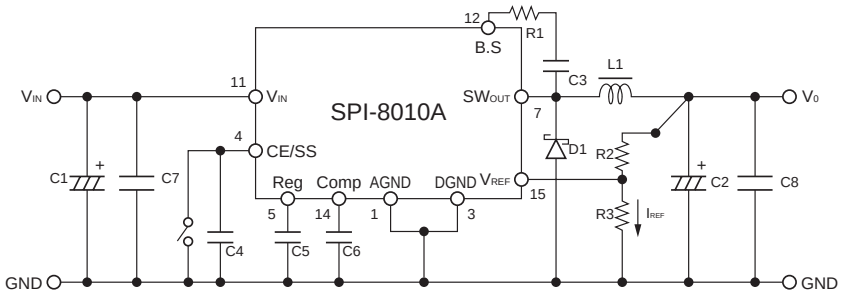

C1: 220μF/63V
C2: 470μF/25V
C3: 0.1μF
C4: 1000pF
C5: 0.1μF
C6: 0.047μF
C7: 0.1μF
C8: 0.1μF
R1: 47Ω
L1: 47μH
D1: SPB-G56S
(Sanken)

Diode D_1

- Be sure to use a Schottky-barrier diode for D_1. If other diodes like fast recovery diodes are used, ICs may be destroyed because of the reverse voltage generated by the recovery voltage or ON voltage.

Choke coil L_1

- If the winding resistance of the choke coil is too high, the efficiency may drop below the rated value.
- As the overcurrent protection starting current is about 4.5A, take care concerning heat radiation from the choke coil caused by magnetic saturation due to overload or short-circuited load.

Capacitors C_1, C_2

- As large ripple currents flow through C_1 and C_2, use high-frequency and low-impedance capacitors aiming for switching-mode-power-supply use. Especially when the impedance of C_2 is high, the switching waveform may become abnormal at low temperatures. For C_2, do not use a capacitor with an extremely low equivalent series resistance (ESR) such as an OS capacitor or a tantalum capacitor, which may cause an abnormal oscillation.

Resistors R_2, R_3

- R_2 and R_3 are the resistors to set the output voltage. Set their values so that I_{REF} becomes approx. 2mA. Obtain R_2 and R_3 values by the following formula:

$$R2=\frac{(V_{OUT}-V_{REF})}{I_{REF}}=\frac{(V_{OUT}-1)}{2\times10^{-3}}(\Omega),\ R3=\frac{V_{REF}}{I_{REF}}=\frac{1}{2\times10^{-3}}\fallingdotseq500(\Omega)$$

◎To create the optimum operating conditions, place the components as close as possible to each other.

■T_a-P_D Characteristics

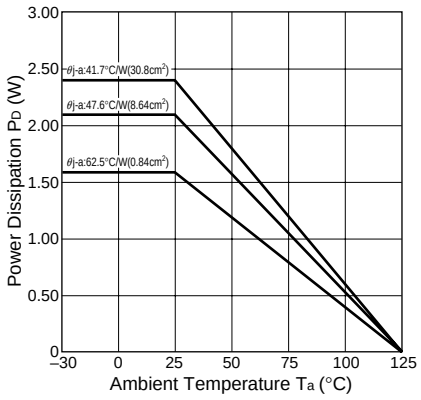

$$P_D=V_O\cdot I_O\left(\frac{100}{\eta\chi}-1\right)-V_F\cdot I_O\left(1-\frac{V_O}{V_{IN}}\right)$$

Note 1: The efficiency depends on the input voltage and the output current. Therefore, obtain the value from the efficiency graph and substitute the percentage in the formula above.

Note 2: Thermal design for D_1 must be considered separately.

V_O : Output voltage
V_{IN} : Input voltage
I_O : Output current
$\eta\chi$: Efficiency (%)
V_F : Diode D_1 forward voltage
SPB-G56S···0.4V(I_O=2A)

SI-8000Q Series Surface Mount, Current Mode Cntrol Step-down Switching Mode Regulator ICs

■Features

- Compact surface-mount package (HSOP8)
- Introduction of current mode control method
- Output current: 3.5 A
- High efficiency: 90% (Vo = 5 V)
- Built-in reference oscillator (500 kHz)
- Built-in drooping-type overcurrent and thermal protection circuits
- Built-in soft start circuit
- Built-in on/off function (Active Hi)
- Low current consumption during off

■Absolute Maximum Ratings

Parameter	Symbol	Ratings	Unit	Conditions
Input Voltage	V_{IN}	30	V	
Power Dissipation*1	P_D	1.35	W	When mounted on glass-epoxy board, 30×30 mm (copper laminate area: 25×25 mm)
Junction Temperature*2	T_j	–30 to +150	°C	
Storage Temperature	T_{stg}	–40 to +150	°C	
Thermal Resistance(junction to case)	$\theta_{j\text{-}c}$	40	°C/W	
Thermal Resistance(junction to ambient air)	$\theta_{j\text{-}a}$	74	°C/W	When mounted on glass-epoxy board, 30×30 mm (copper laminate area: 25×25 mm)

*1: Limited by thermal protection circuit
*2: Note that the detection temperature for thermal protection is about 140°C.

■Applications

- DVD recorder, FPD-TV
- Onboard local power supplies
- OA equipment

■Recommended Operating Conditions

Parameter	Symbol	Ratings	Unit	Conditions
		SI-8005Q		
DC Input Voltage Range	V_{IN}	Vo+3*1 to 28	V	
Output Voltage Range	V_O	0.5 to 24	V	
Output Current Range	I_O	0 to 3.5	A	
Operating Junction Temperature Range	T_{jop}	–30 to +125	°C	
Operating Temperature Range	T_{op}	–30 to +85	°C	

*1: The minimum value of the input voltage range is 4.75 V or Vo +3 V, whichever is higher.

■Electrical Characteristics

(R1=4.2kΩ, R2=0.8kΩ when Ta = 25°C and Vo=5V)

Parameter		Symbol		Rating SI-8005Q min.	typ.	max.	Unit
Reference Voltage		V_{ADJ}		0.485	0.500	0.515	V
			Conditions	V_{IN}=12V, Io=1A			
Temperature Coefficient of Reference Voltage		$\Delta V_{ADJ}/\Delta T$			0.05		mV/°C
			Conditions	V_{IN}=12V, Io=1A, Ta=–40 to +85°C			
Efficiency		η			90		%
			Conditions	V_{IN}=12V, Io=1A			
Oscillation Frequency		fo		450	500	550	kHz
			Conditions	V_{IN}=16V, Io=1A			
Line Regulation		ΔV_{OLINE}			30	60	mV
			Conditions	V_{IN}=8 to 28V, Io=1A			
Load Regulation		ΔV_{OLOAD}			30	60	mV
			Conditions	V_{IN}=12V, Io=0.1 to 3.5A			
Overcurrent Protection Starting Current		Is		3.6		6.0	A
			Conditions	V_{IN}=12V			
Quiescent Circuit Current		Iq			18		mA
			Conditions	V_{IN}=12V, Io=0A, V_{EN}=open			
		$I_{q(OFF)}$				20	μA
			Conditions	V_{IN}=12V, Io=0A, V_{EN}=0V			
SS Pin	Outflow Current at Low Voltage	I_{SSL}			5		μA
			Conditions	V_{IN}=16V, V_{SSL}=0V			
EN Pin	High Level Voltage	$V_{C/EN}$		2.8			V
			Conditions	V_{IN}=12V			
	Low Level Voltage	$V_{C/EL}$				2.2	V
			Conditions	V_{IN}=12V			
	Inflow Current at Low Low Voltage	$I_{C/EH}$			5		μA
			Conditions	V_{EN}=0V			
Error Amplifier Voltage Gain		AEA			1000		V/V
Error Amplifier Transformer Conductance		GEA			800		μA/V
Current Sense Amplifier Impedance		1/GCS			0.35		V/A
Maximum ON Duty		DMAX			92		%
Minimum ON Time		DMIN			100		nsec.

*: Pin 8 is the SS pin. Soft start at power on can be performed with a capacitor connected to this pin.
The SS pin is pulled up to the power supply in the IC, so applying the external voltage is prohibited.

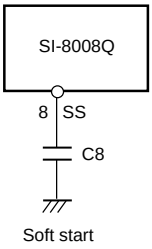

■External Dimensions (HSOP8)

(Unit : mm)

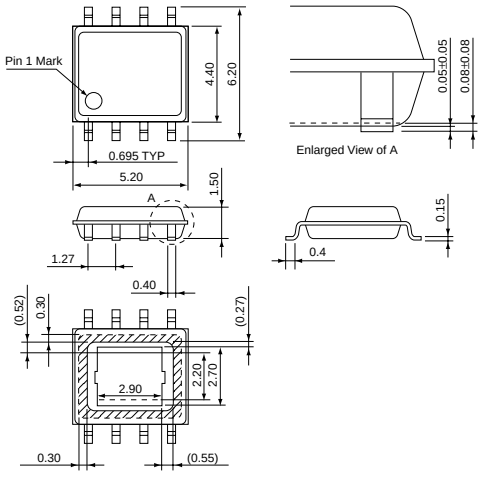

Pin Assignment
①BS
②IN
③SW
④GND
⑤FB
⑥COMP
⑦EN
⑧SS

Plastic Mold Package Type

Flammability: UL 94V-0

Product Mass: Approx. 0.1 g

■Block Diagram

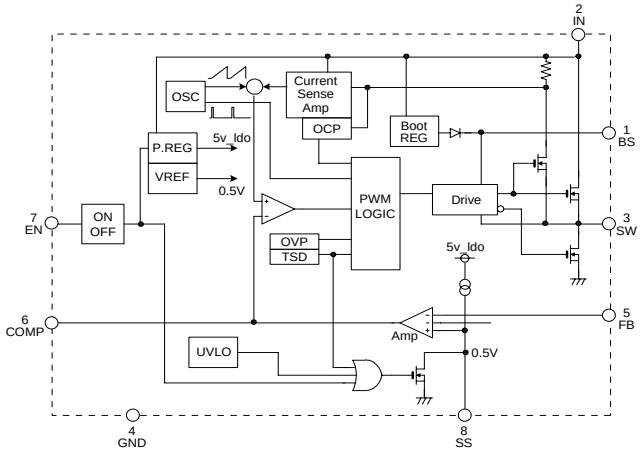

■Typical Connection Diagram

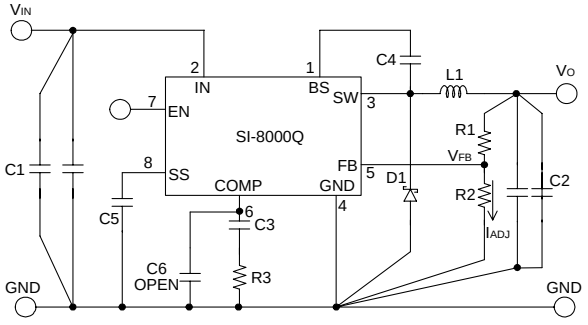

C1:10μF/50V
(Murata:GRM55DB31H106KA87)
C2:22μF/16V
(Murata:GRM32ER71A226KE20)
C3:560pF
(Murata:GRM18 Type)
C4:10nF
(murata: GRM18 Type)
C5:10nF
(murata: GRM18 Type)
L1:10μH
D1: SPB-G56S (Sanken)
SJPB-L4 (Sanken)
R1:46kΩ (Vo=5V)
R2:5.1kΩ
R3:24kΩ

SI-8000FD Series Surface Mount, Separate Excitation Step-down Switching Mode Regulator ICs

■Features

- Output current: 3.5 A
- High efficiency: 83% (Vo = 5 V, V_{IN} = 15 V, Io = 2 A)
- Requires only 6 discrete components
- Built-in reference oscillator (300 kHz)
- Built-in drooping-type overcurrent and thermal protection circuits
- Built-in soft start circuit (Output ON/OFF available)
  - SI-8001FDE
- Built-in on/off function (active Low)
  - SI-8001FDL
- Low current consumption during off
  - SI-8001FDL

■Applications

- DVD recorder, FPD-TV
- OA equipment, such as printers
- Onboard local power supplies

■Lineup

Part Number	SI-8001FDE	SI-8001FDL
V_O(V)	Variable(0.8 to 24)	
Io(A)	3.5	
Package	TO263-5	
Function	Soft start	ON/OFF

■Absolute Maximum Ratings

Parameter	Symbol	Ratings		Unit	Conditions
		SI-8001FDE	SI-8001FDL		
Input Voltage	V_{IN}	43		V	
ON/OFF Control Voltage	V_c	–	V_{IN}	V	
Power Dissipation*1	P_D	3		W	When mounted on glass-epoxy board measuring 40×40 mm (copper laminate area: 100%)
Junction Temperature*2	T_j	+150		°C	
Storage Temperature	T_{stg}	–40 to +150		°C	
Thermal Resistance (Junction to Case)	$\theta_{j\text{-}c}$	3*1		°C/W	When mounted on glass-epoxy board measuring 40×40 mm (copper laminate area: 100%)
Thermal Resistance (Junction to Ambient Air)	$\theta_{j\text{-}a}$	33.3*1		°C/W	When mounted on glass-epoxy board measuring 40×40 mm (copper laminate area: 100%)

*1 : Limited by thermal protection circuit

*2 : This product has built-in thermal protection circuits that may activate when the junction temperature exceeds 130°C. The recommended design for the junction temperature during IC operation is below 125°C.

■Recommended Operating Conditions

Parameter	Symbol	Ratings		Unit
		SI-8001FDE	SI-8050FDL	
Input Voltage Range	V_{IN}	Vo+3*1 to 40		V
Output Voltage Range	V_O	0.8 to 24		V
Output Current Range	I_O	0 to 3.5		A
Operating Junction Temperature Range	T_{jop}	–30 to +100		°C
Operating Temperature Range	T_{op}	–30 to +85		°C

*1: The minimum value of the input voltage range is 4.5 V or Vo + 3 V, whichever is higher.

■Electrical Characteristics

(R1=4.2kΩ, R2=0.8kΩ when Ta = 25°C and Vo=5V)

Parameter		Symbol	Ratings						Unit
			SI–8001FDE			SI–8001FDL			
			min.	typ.	max.	min.	typ.	max.	
Reference Voltage		V_{ADJ}	0.784	0.800	0.816	0.784	0.800	0.816	V
		Conditions	V_{IN}=15V, Io=0.2A			V_{IN}=15V, Io=0.2A			
Temperature Coefficient of Reference Voltage		$\Delta V_{ADJ}/\Delta T$		±0.1			±0.1		mV/°C
		Conditions	V_{IN}=15V, Io=0.2A, Tc=0 to 100°C			V_{IN}=15V, Io=0.2A, Tc=0 to 100°C			
Efficiency		η		83			83		%
		Conditions	V_{IN}=15V, Io=2A			V_{IN}=15V, Io=2A			
Oscillation Frequency		f_O	270	300	330	270	300	330	kHz
		Conditions	V_{IN}=15V, Io=2A			V_{IN}=15V, Io=2A			
Line Regulation		ΔV_{OLINE}			80			80	mV
		Conditions	V_{IN}=10 to 30V, Io=2A			V_{IN}=10 to 30V, Io=2A			
Load Regulation		ΔV_{OLOAD}			50			50	mV
		Conditions	V_{IN}=15V, Io=0.2 to 3.5A			V_{IN}=15V, Io=0.2 to 3.5A			
Overcurrent Protection Starting Current		I_S	3.6			3.6			A
		Conditions	V_{IN}=15V			V_{IN}=15V			
SS Pin*1	Low Level Voltage	V_{SSL}			0.5	–	–	–	V
	Outflow Cuurent at Low Voltage	I_{SSL}		6	30	–	–	–	μA
		Conditions	V_{IN}=15V, V_{SS}=0V			–	–	–	
ON/OFF Pin*2	ON/OFF Control Voltage (Output on)	Vc, IH	–	–	–			0.8	V
	ON/OFF Control Voltage (Output off)	Vc, IL	–	–	–	2.0			V
	ON/OFF Controll Current (Output on)	Ic, IH	–	–	–		6	100	μA
		Conditions	–			Vc=2V			
Quiescent Circuit Current		Iq		6			6		mA
		Conditions	V_{IN}=15V, Io=0A			V_{IN}=15V, Io=0A			
		Iq(OFF)		200	600		30	200	μA
		Conditions	V_{IN}=15V, Vss=0V			V_{IN}=15V, Vc=2V			

*1: Pin 5 is the SS pin. Soft start at power on can be performed with a capacitor connected to this pin. The output can also be turned ON/OFF with this pin. The output is stopped by setting the voltage of this pin to VSSL or lower. SS-pin voltage can be changed with an open-collector drive circuit of a transistor. When using both the soft-start and ON/OFF functions together, the discharge current from C3 flows into the ON/OFF control transistor. Therefore, limit the current securely to protect the transistor if C3 capacitance is large. The SS pin is pulled up (3.7 V typ.) to the power supply in the IC, so applying the external voltage is prohibited. If this pin is not used, leave it open.

*2: Output is OFF when the output control terminal VC is open. Each input level is equivalent to LS-TTL. Therefore, the device can be driven directly by LS-TTLs.

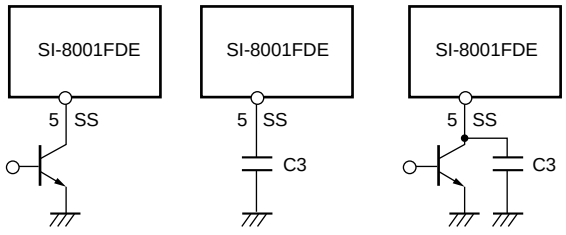

Vo.ON/OFF | Soft start | Soft start +Vo. On/OFF

■External Dimensions (TO263-5)

(Unit : mm)

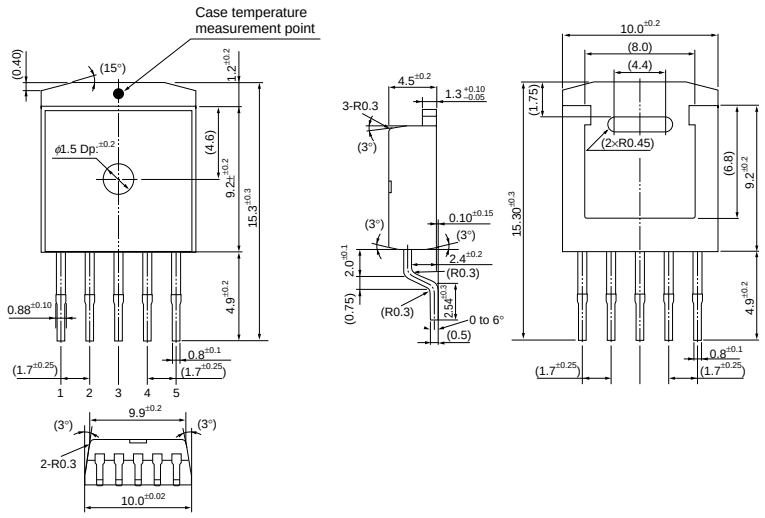

Pin Assignment
① IN
② SW
③ GND (Common to the rear side of the product)
④ V_{ADJ}
⑤ SS or Vc

Plastic Mold Package Type
Flammability: UL 94V-0
Product Mass: Approx. 1.48g

■Block Diagram

SI-8001FDE

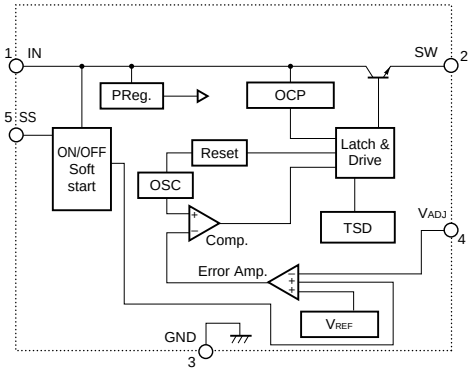

SI-8001FDL

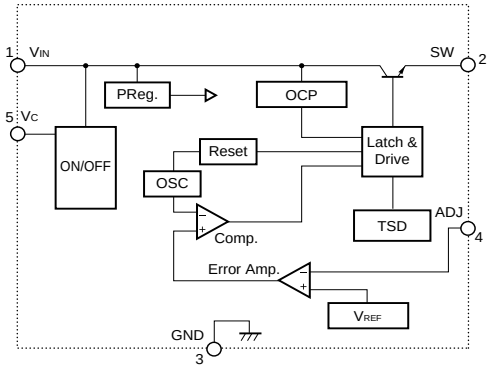

■Typical Connection Diagram

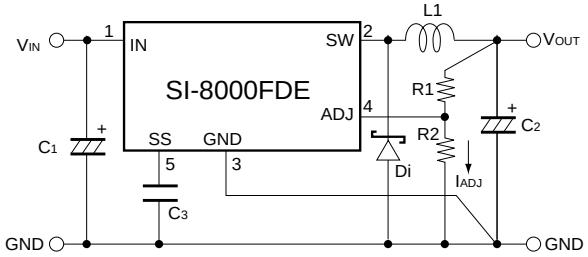

C_1 : 470μF
C_2 : 680μF
C_3 : 0.1μ (Only when using soft-start function)
L_1 : 47μH
Di : SPB-G56S (Sanken)

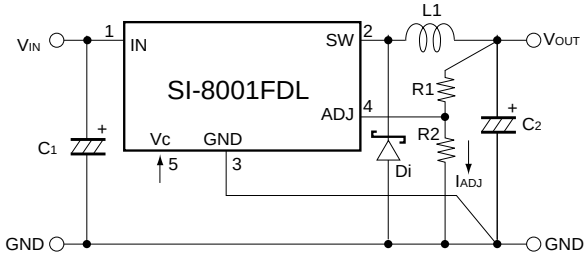

C_1 : 470μF
C_2 : 680μF
L_1 : 47μH
Di : SPB-G56S (Sanken)

SI-8000HD Series Surface-Mount, Separate Excitation Step-down Switching Mode Regulator ICs

■Features

- Surface-mount package (TO263-5)
- Output current: 5.5 A
- High efficiency: 83% (at TYP, Vo = 5 V)
- Requires only 5 discrete components (SI-8008HD)
- Built-in reference oscillator (150 kHz)
- Built-in drooping-type overcurrent and thermal protection circuits
- Built-in soft start circuit (Output ON/OFF available)
- Low current consumption during off

■Applications

- DVD recorder, FPD-TV
- Onboard local power supplies
- OA equipment

■Absolute Maximum Ratings

Parameter	Symbol	Ratings	Unit	Conditions
Input Voltage	V_{IN}	43	V	
Power Dissipation*1	P_D	3	W	When mounted on glass-epoxy board measuring 40×40 mm (copper laminate area: 100%)
Junction Temperature*2	T_j	+150	°C	
Storage Temperature	T_{stg}	–40 to +150	°C	
Thermal Resistance (Junction to Case)	$\theta_{j\text{-}c}$	3	°C/W	When mounted on glass-epoxy board measuring 40×40 mm (copper laminate area: 100%)
Thermal Resistance (Junction to Ambient Air)	$\theta_{j\text{-}a}$	33.3	°C/W	When mounted on glass-epoxy board measuring 40×40 mm (copper laminate area: 100%)

*1: Limited by thermal protection circuit

*2: This product has built-in thermal protection circuits that may activate when the junction temperature exceeds 130°C. The recommended design for the junction temperature during IC operation is below 125°C.

■Recommended Operating Conditions

Parameter	Symbol	Ratings	Unit	Conditions
		SI-8008HD		
Input Voltage Range	V_{IN}	Vo+3*1 to 40	V	
Output Voltage Range	V_O	0.8 to 24	V	
Output Current Range	I_O	0 to 5.5	A	$V_{IN} \geq$ Vo+3V
Operating Junction Temperature Range	T_{jop}	–30 to +100	°C	
Operating Temperature Range	T_{op}	–30 to +85	°C	

*1: The minimum value of the input voltage range is 4.5 V or Vo+3 V, whichever is higher.

■Electrical Characteristics

(R1=4.2kΩ, R2=0.8kΩ when Ta=25°C and Vo=5V)

Paramter		Symbol	Ratings			Unit
			SI-8008HD			
			min.	typ.	max.	
Reference Voltage		V_{ADJ}	0.784	0.800	0.816	V
		Conditions	V_{IN}=15V, Io=1A			
Temperature Coefficient of Reference Voltage		($\Delta V_{ADJ}/\Delta T$)		±0.1		mV/°C
		Conditions	V_{IN}=15V, Io=1A, Tc=0 to 100°C			
Efficiency		η		83		%
		Conditions	V_{IN}=15V, Io=3A			
Oscillation Frequency		fo		150		kHz
		Conditions	V_{IN}=15V, Io=3A			
Line Regulation		ΔV_{OLINE}		60	80	mV
		Conditions	V_{IN}=10 to 30V, Io=3A			
Load Regulation		ΔV_{OLOAD}		20	50	mV
		Conditions	V_{IN}=15V, Io=0.2 to 5.5A			
Overcurrent Protection Starting Current		I_S	5.6	6.5	7.5	A
		Conditions	V_{IN}=15V			
SS Pin*1	Low Level Voltage	V_{SSL}			0.5	V
	Outflow Current at Low Voltage	I_{SSL}		10	30	μA
		Conditions	V_{SSL}=0V			
Quiescent Circuit Current		I_q		6		mA
		Conditions	V_{IN}=15V, Io=0A			
		$I_{q(OFF)}$		200	400	μA
		Conditions	V_{IN}=15V, V_{SS}=0V			

*1: Pin 5 is the SS pin. Soft start at power on can be performed with a capacitor connected to this pin. The output can also be turned ON/OFF with this pin.
The output is stopped by setting the voltage of this pin to VSSL or lower. SS-pin voltage can be changed with an open-collector drive circuit of a transistor. When using both the soft-start and ON/OFF functions together, the discharge current from C3 flows into the ON/OFF control transistor. Therefore, limit the current securely to protect the transistor if C3 capacitance is large. The SS pin is pulled up (3.7 V typ.) to the power supply in the IC, so applying the external voltage is prohibited. If this pin is not used, leave it open.

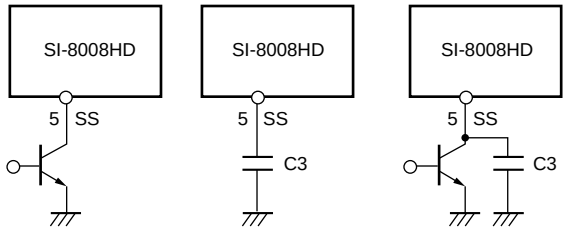

Vo.ON/OFF | Soft start | Soft start +Vo. On/OFF

■External Dimensions (TO263-5)

(Unit : mm)

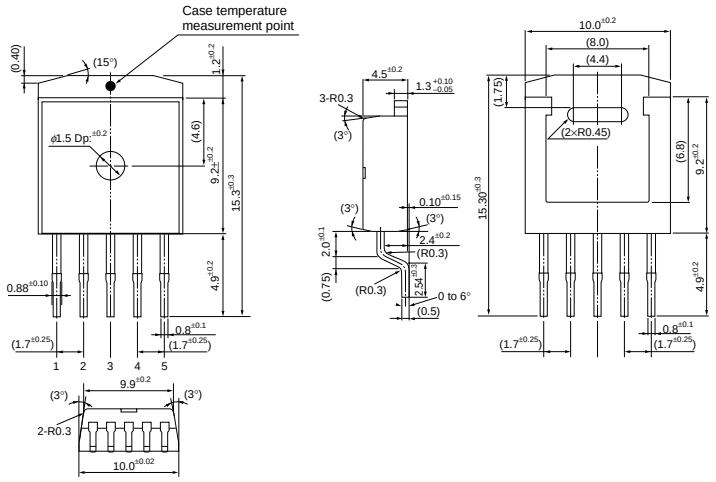

Pin Assignment
① IN
② SWOUT
③ GND
④ ADJ
⑤ SS

Plastic Mold Package Type

Flammability: UL 94V-0

Product Mass: Approx. 1.48 g

■Block Diagram

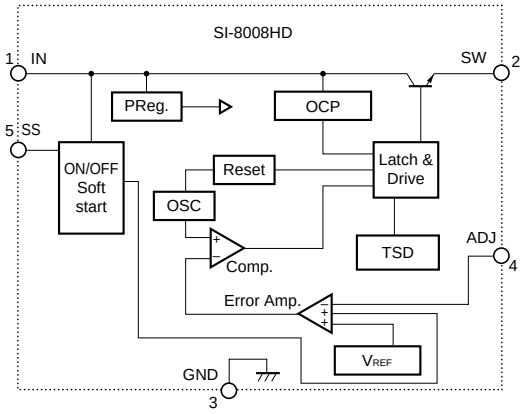

■Typical Connection Diagram

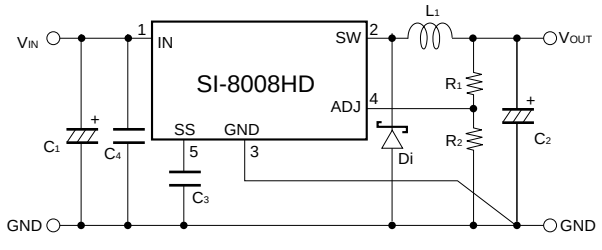

C1 : 1500µF
C2 : 1000µF
C3 : 1µF (Only when using soft-start function)
C4 : 4.7µF (GMR32ER71H475KA88L (Murata Manufacturing) recommended)
L1 : 100µH
Di : FMB-G16L (Sanken)

■Reference Data

The acceptable loss of the package is 3 W for the SI-8000HD series, so some ranges are not available, depending on the relation between the input voltage and output current.

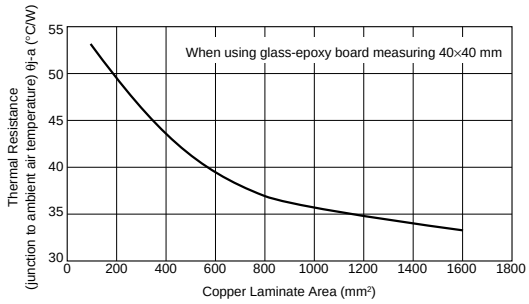

SI-8000E Series Full-Mold, Separate Excitation Step-down Switching Mode Regulator ICs

■Features

- Compact full-mold package (equivalent to TO220)
- High efficiency: 80%
- Requires only 4 discrete components
- Internally-adjusted phase correction and output voltage
- Built-in reference oscillator (60kHz)
- Built-in overcurrent and thermal protection circuits

■Applications

- Power supplies for telecommunication equipment
- Onboard local power supplies

■Lineup

Part Number	SI-8050E
V_O(V)	5.0
I_O(A)	0.6

■Absolute Maximum Ratings

Parameter	Symbol	Ratings	Unit
DC Input Voltage	V_{IN}	43	V
Power Dissipation	P_{D1}	14(With infinite heatsink)	W
	P_{D2}	1.5(Without heatsink, stand-alone operation)	W
Junction Temperature	T_j	+125	°C
Storage Temperature	T_{stg}	–40 to +125	°C
Thermal Resistance(junction to case)	$\theta_{j\text{-}c}$	7.0	°C/W
Thermal Resistance(junction to ambient air)	$\theta_{j\text{-}a}$	66.7	°C/W

■Recommended Operating Conditions

Parameter	Symbol	Ratings	Unit
		SI-8050E	
DC Input Voltage Range	V_{IN}	7 to 40	V
Output Current Range	I_O	0 to 0.6	A
Operating Junction Temperature Range	T_{jop}	–30 to +125	°C
Operating Temperature Range	T_{op}	–30 to +125	°C

■Electrical Characteristics

(T_a=25°C)

Parameter	Symbol	Ratings			Unit
		SI-8050E			
		min.	typ.	max.	
Output Voltage	V_O	4.80	5.00	5.20	V
	Conditions	V_{IN}=20V, I_O=0.3A			
Efficiency	η		80		%
	Conditions	V_{IN}=20V, I_O=0.3A			
Oscillation Frequency	f		60		kHz
	Conditions	V_{IN}=20V, I_O=0.3A			
Line Regulation	ΔV_{OLINE}		80	100	mV
	Conditions	V_{IN}=10 to 30V, I_O=0.3A			
Load Regulation	ΔV_{OLOAD}		30	40	mV
	Conditions	V_{IN}=20V, I_O=0.1 to 0.4A			
Temperature Coefficient of Output Voltage	$\Delta V_O/\Delta T_a$		±0.5		mV/°C
Overcurrent Protection Starting Current	I_{S1}	0.61			A
	Conditions	V_{IN}=10V			

■External Dimensions (TO220F-5)

(Unit : mm)

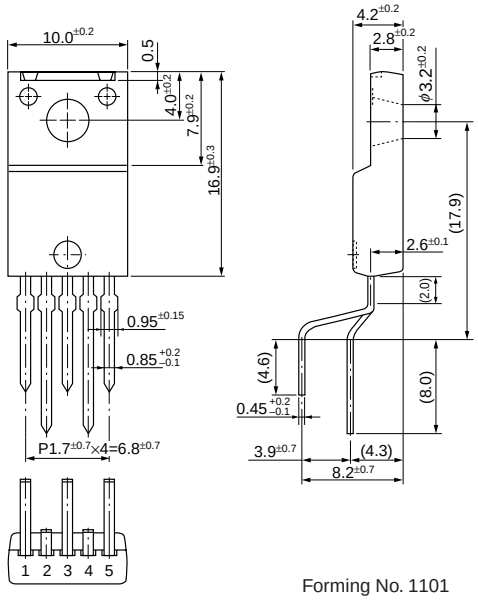

Forming No. 1101

Pin Assignment
① V_{IN}
② SW_{OUT}
③ GND
④ V_{OS}
⑤ N.C

Plastic Mold Package Type
Flammability: UL94V-0
Product Mass: Approx. 2.3g

■Block Diagram

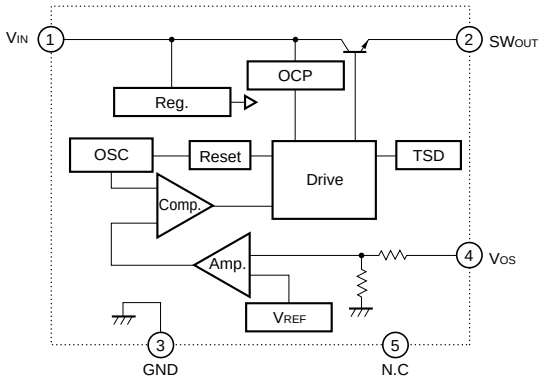

■Typical Connection Diagram

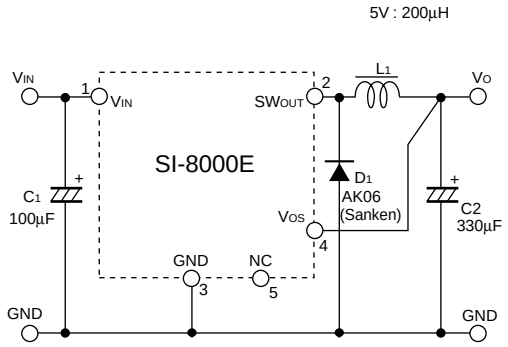

■T_a-P_D Characteristics

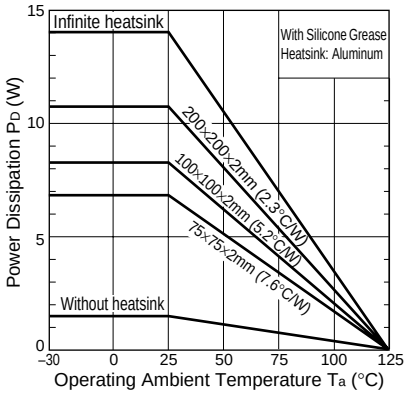

$$P_D = V_O \cdot I_O \left(\frac{100}{\eta\chi} - 1\right) - V_F \cdot I_O \left(1 - \frac{V_O}{V_{IN}}\right)$$

The efficiency depends on the input voltage and the output current. Therefore, obtain the value from the efficiency graph and substitute the percentage in the formula above.

V_O : Output voltage
V_{IN} : Input voltage
I_O : Output current
$\eta\chi$: Efficiency (%)
V_F : Diode D_1 forward voltage 0.4V(AK06)

Thermal design for D_1 must be considered separately.

SI-8000JF Series Full-Mold, Separate Excitation Step-down Switching Mode Regulator ICs

■Features

- Compact full-mold package (equivalent to TO220)
- Output current: 1.5A
- High efficiency: 67 to 88%
- Requires only 4 discrete components
- Internally-adjusted phase correction and output voltage
- Capable of downsize a choke-coil due to IC's high switching frequency (125kHz). (Compared with conventional Sanken devices)
- Built-in foldback-overcurrent and thermal protection circuits
- Output ON/OFF available (circuit current at output OFF: 200μA max.)
- Soft start available by ON/OFF pin

■Lineup

Part Number	SI-8015JF	SI-8033JF	SI-8050JF	SI-8120JF
V_O (V)*	1.59	3.3	5.0	12.0
I_O (A)	1.5			

* V_{REF}(V) for SI-8015JF

■Absolute Maximum Ratings

Parameter	Symbol	Ratings	Unit
DC Input Voltage	V_{IN}	43	V
Power Dissipation	P_{D1}	16.6 (with infinite heatsink)	W
	P_{D2}	1.5 (without heatsink, standalone operation)	W
Junction Temperature	T_j	+125	°C
Storage Temperature	T_{stg}	–40 to +125	°C
Thermal Resistance (Junction to Case)	$\theta_{j\text{-}c}$	6.0	°C/W

■Applications

- Power supplies for telecommunication equipment
- Onboard local power supplies

■Recommended Operating Conditions

Parameter	Symbol	Ratings				Unit	Conditions
		SI-8015JF*	SI-8033JF	SI-8050JF	SI-8120JF		
DC Input Voltage Range	$V_{IN}1$	V_O+2 to 40	5.3 to 40	7 to 40	14 to 40	V	I_O=0 to 1A
	$V_{IN}2$	V_O+3 to 40	6.3 to 40	8 to 40	15 to 40	V	I_O=0 to 1.5A
Output Current Range	I_O	0 to 1.5				A	V_{IN}≥V_O+3V
Operating Junction Temperature Range	T_{jop}	–30 to +125				°C	

* SI-8015JF is a variable output voltage type. The variable output voltage range is from 2.5 V to 24 V.

■Electrical Characteristics

(T_a=25°C)

Parameter	Symbol	Ratings												Unit
		SI-8015JF			SI-8033JF			SI-8050JF			SI-8120JF			
		min.	typ.	max.	min.	typ.	max.	min.	typ.	max.	min.	typ.	max.	
Output Voltage*1	V_O*2	1.558	1.59	1.622	3.234	3.30	3.366	4.90	5.00	5.10	11.76	12.00	12.24	V
	Conditions	V_{IN}=12V, I_O=0.5A			V_{IN}=15V, I_O=0.5A			V_{IN}=20V, I_O=0.5A			V_{IN}=24V, I_O=0.5A			
Efficiency	η		67			77			82			88		%
	Conditions	V_{IN}=12V, I_O=0.5A			V_{IN}=15V, I_O=0.5A			V_{IN}=20V, I_O=0.5A			V_{IN}=24V, I_O=0.5A			
Oscillation Frequency	f		125			125			125			125		kHz
	Conditions	V_{IN}=12V, I_O=0.5A			V_{IN}=15V, I_O=0.5A			V_{IN}=20V, I_O=0.5A			V_{IN}=24V, I_O=0.5A			
Line Regulation	ΔV_{OLINE}		25	80		25	80		40	100		60	130	mV
	Conditions	V_{IN}=8 to 30V, I_O=0.5A			V_{IN}=8 to 30V, I_O=1.0A			V_{IN}=10 to 30V, I_O=1.0A			V_{IN}=18 to 30V, I_O=1.0A			
Load Regulation	ΔV_{OLOAD}		10	30		10	30		10	40		10	40	mV
	Conditions	V_{IN}=12V, I_O=0.2 to 0.8A			V_{IN}=15V, I_O=0.5 to1.5A			V_{IN}=20V, I_O=0.5 to 1.5A			V_{IN}=24V, I_O=0.5 to 1.5A			
Temperature Coefficient of Output Voltage*3	$\Delta V_O/\Delta T_a$*4		±0.5			±0.5			±0.5			±1.0		mV/°C
Overcurrent Protection Starting Current	I_{S1}	1.6			1.6			1.6			1.6			A
	Conditions	V_{IN}=12V			V_{IN}=15V			V_{IN}=20V			V_{IN}=24V			
ON/OFF*5 Terminal, Low Level Voltage	V_{SSL}			0.5			0.5			0.5			0.5	V
ON/OFF*5 Terminal, Outflow Current at Low Voltage	I_{SSL}			100			100			100			100	μA
	Conditions	V_{SSL}=0V			V_{SSL}=0V			V_{SSL}=0V			V_{SSL}=0V			
Quiescent Circuit Current	I_q		7			7			7			7		mA
	Conditions	V_{IN}=12V, I_O=0A			V_{IN}=15V, I_O=0A			V_{IN}=20V, I_O=0A			V_{IN}=24V, I_O=0A			
	$I_{q(OFF)}$			200			200			200			200	μA
	Conditions	V_{IN}=12V, $V_{ON/OFF}$=0.3V			V_{IN}=15V, $V_{ON/OFF}$=0.3V			V_{IN}=20V, $V_{ON/OFF}$=0.3V			V_{IN}=24V, $V_{ON/OFF}$=0.3V			

*1: Reference voltage for SI-8015JF
*2: V_{REF} for SI-8015JF
*3: Temperature Coefficient of Reference Voltage for SI-8015JF
*4: $\Delta V_{REF}/\Delta T_a$ for SI-8015JF
*5: Pin 5 is the ON/OFF pin. Soft start at power on can be performed with a capacitor connected to this pin.
The output can also be turned ON/OFF with this pin. The output is stopped by setting the voltage of this pin to V_{SSL} or lower. ON/OFF-pin voltage can be changed with an open-collector drive circuit of a transistor. When using both the soft-start and ON/OFF functions together, the discharge current from C_3 flows into the ON/OFF control transistor. Therefore, limit the current securely to protect the transistor if C_3 capacitance is large. The ON/OFF pin is pulled up to the power supply in the IC, so applying the external voltage is prohibited. If this pin is not used, leave it open.

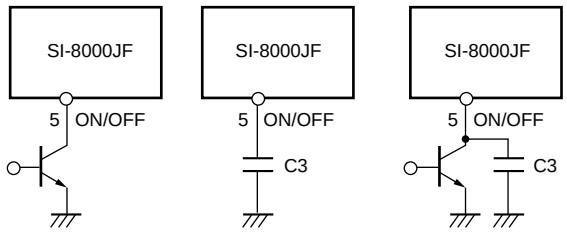

$V_{OUT.}$ ON/OFF | Soft start | Soft start +$V_{OUT.}$ ON/OFF

■External Dimensions (TO220F-5)

(Unit : mm)

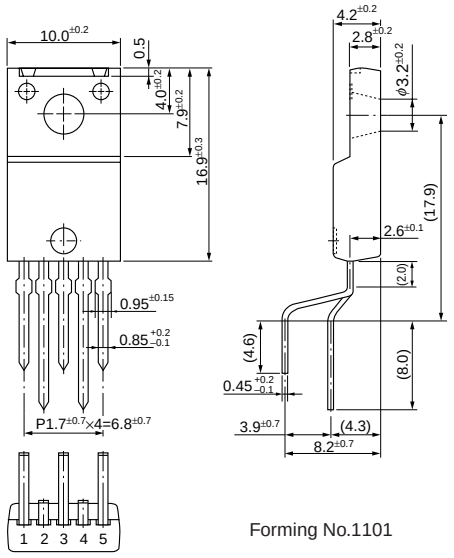

Pin Assignment
① V_{IN}
② SW_{OUT}
③ GND
④ V_{OS}
⑤ ON/OFF

Plastic Mold Package Type
Flammability: UL94V-0
Product Mass: Approx. 2.3g

■Block Diagram

SI-8015JF

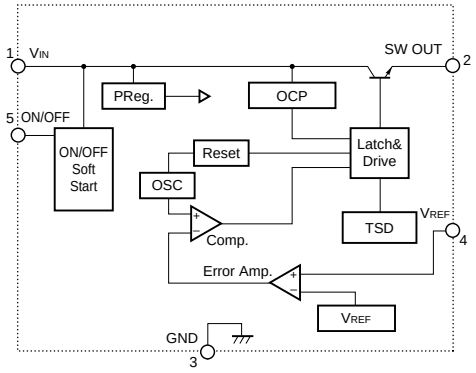

8033JF, 8050JF, 8120JF

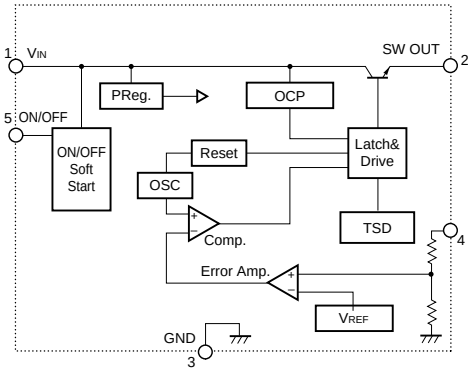

■Typical Connection Diagram

SI-8015JF

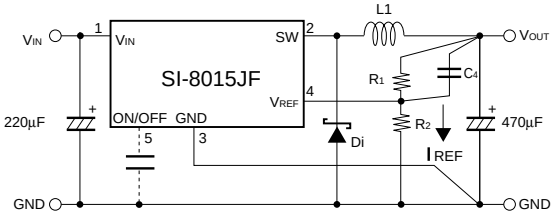

IREF shall be approx. 2mA.

C_1 : 50V/220μF
C_2 : 25V/470μF
C_3 : 10V/0.47μF (Only when using soft-start function)
C_4 : 6800pF
L_1 : 100μH
Di : RK16 (Sanken)

$$V_{OUT} = \frac{V_{REF} \times (R_1 + R_2)}{R_2}$$

8033JF, 8050JF, 8120JF

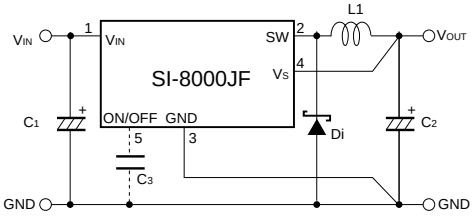

C_1 : 50V/220μF
C_2 : 25V/470μF
C_3 : 10V/0.47μF (Only when using soft-start function)
L_1 : 100μH
Di : RK16 (Sanken)

SI-8000TFE Series Full-Mold, Separate Excitation Step-down Switching Mode Regulator ICs

■Features

- Compact full-mold package (equivalent to TO220)
- Output current: 1.5 A
- High efficiency: 81% typ. (at Vo = 5 V)
- Requires only 4 discrete components
- Built-in reference oscillator (300 kHz)
- Built-in dropping-type-overcurrent and thermal protection circuits
- Output ON/OFF available (circuit current at output OFF: 200μA typ.)
- Soft start available by ON/OFF pin

■Applications

- Onboard local power supplies
- AV equipment
- OA equipment

■Lineup

Part Number	SI-8008TFE	SI-8050TFE
V_O (V)	Variable (0.8 to 24)	5
I_O (A)	1.5	

■Absolute Maximum Ratings

Parameter	Symbol	Ratings	Unit	Conditions
DC Input Voltage	V_{IN}	43	V	
Power Dissipation	P_{D1-1}	17.8 (with infinite heatsink)	W	Limited by thermal protection, T_{jmax}=150°C
	P_{D1-2}	14.2 (with infinite heatsink)		T_{jmax}=125°C
	P_{D2-1}	2.15 (without heat sink, standalone operation)		Limited by thermal protection, T_{jmax}=150°C
	P_{D2-2}	1.72 (without heatsink, standalone operation)		T_{jmax}=125°C
Junction Temperature*	T_j	–30 to +150	°C	
Storage Temperature	T_{stg}	–40 to +150	°C	
Thermal Resistance (Junction to Case)	θ_{j-c}	7	°C/W	
Thermal Resistance (Junction to Ambient Air)	θ_{j-a}	58	°C/W	

*: This product has built-in thermal protection circuits that may operate when the junction temperature rises above 130°C. The recommended design for the junction temperature during operation is below 125°C.

■Recommended Operating Conditions

Parameter	Symbol	Ratings		Unit
		SI-8008TFE	SI-8050TFE	
Input Voltage Range	V_{IN}	Vo+3*1 to 40	8 to 40	V
Output Voltage Range	V_O	0.8 to 24	5.0	V
Output Current Range	I_O	0 to 1.5		A
Operating Junction Temperature Range	T_{jop}	–20 to +125		°C
Operating Temperature Range	T_{op}	–20 to +125		°C

*1: The minimum value of an input voltage range is the higher of 4.5 V or V_O + 3 V.

■Electrical Characteristics

(T_a=25°C)

Parameter		Symbol		Ratings SI-8008TFE min.	typ.	max.	Ratings SI-8050TFE min.	typ.	max.	Unit
Output Voltage (Reference Voltage)		Vo (V_{ADJ})					4.90	5.00	5.10	V
				0.784	0.800	0.816				
			Conditions	V_{IN}=15V, I_o=0.1A			V_{IN}=15V, I_o=0.1A			
Temperature Coefficient of Output Voltage (Temperature Coefficient of Reference Voltage)		ΔVo/ΔT ($\Delta V_{REF}/\Delta T$)						±0.5		mV/°C
					±0.1					
			Conditions	V_{IN}=15V, I_o=0.1A, T_c=0 to 100°C			V_{IN}=15V, I_o=0.1A, T_c=0 to 100°C			
Efficiency		η			81			81		%
			Conditions	V_{IN}=15V, I_o=0.5A			V_{IN}=15V, I_o=0.5A			
Oscillation Frequency		fo			300			300		kHz
			Conditions	V_{IN}=15V, I_o=0.5A			V_{IN}=15V, I_o=0.5A			
Line Regulation		ΔV_{OLINE}			60	80		60	80	mV
			Conditions	V_{IN}=10 to 30V, I_o=0.5A			V_{IN}=10 to 30V, I_o=0.5A			
Load Regulation		ΔV_{OLOAD}			10	40		10	40	mV
			Conditions	V_{IN}=15V, I_o=0.2 to 1.5A			V_{IN}=15V, I_o=0.2 to 1.5A			
Overcurrent Protection Starting Current		I_S		1.6			1.6			A
			Conditions	V_{IN}=15V			V_{IN}=15V			
ON/OFF Pin*	Low Level Voltage	V_{SSL}				0.5			0.5	V
	Outflow Current at Low Voltage	I_{SSL}			10	40		10	40	μA
			Conditions	V_{SSL}=0V			V_{SSL}=0V			
Quiescent Circuit Current		I_q			6			6		mA
			Conditions	V_{IN}=15V, I_o=0A			V_{IN}=15V, I_o=0A			
		$I_{q(OFF)}$			200	400		200	400	μA
			Conditions	V_{IN}=15V, V_{SS}=0V			V_{IN}=15V, V_{SS}=0V			

*: Pin 5 is the SS pin. Soft start at power on can be performed with a capacitor connected to this pin. The output can also be turned ON/OFF with this pin. The output is stopped by setting the voltage of this pin to VSSL or lower. SS-pin voltage can be changed with an open-collector drive circuit of a transistor. When using both the soft-start and ON/OFF functions together, the discharge current from C3 flows into the ON/OFF control transistor. Therefore, limit the current securely to protect the transistor if C3 capacitance is large. The SS pin is pulled up to the power supply in the IC, so applying the external voltage is prohibited. If the pin is not used, leave it open.

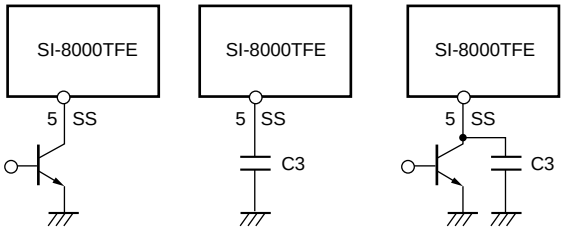

V_O.ON/OFF | Soft start | Soft start +V_O.ON/OFF

■External Dimensions (TO220F-5)

(Unit : mm)

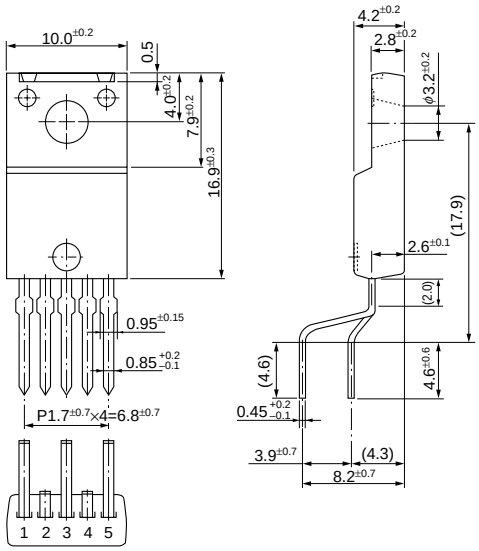

Pin Assignment
① V_{IN}
② SW
③ GND
④ ADJ
⑤ SS

Plastic Mold Package Type
Flammability: UL94V-0
Product Mass: Approx. 2.3g

■Block Diagram

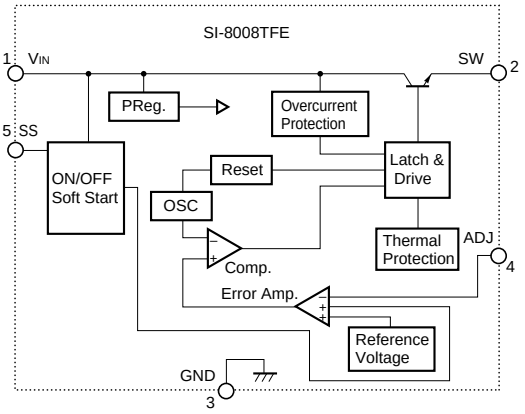

■Typical Connection Diagram

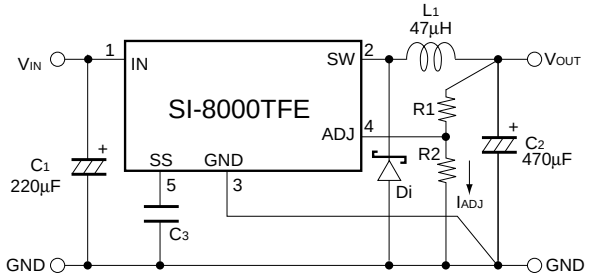

C_1 : 220μF
C_2 : 470μF
C_3 :1μF (Only when using soft-start function)
L_1 : 47μH
Di : RK16 (Sanken)

SI-8000GL Series Compact, Separate Excitation Step-down Switching Mode Regulator ICs

■Features

- DIP 8 pin package
- Output current: 1.5A
- High efficiency: 86% (at V_{IN} = 20V, I_O = 1A, V_O = 5V)
- Capable of downsize a choke-coil due to IC's high switching frequency (250kHz). (Compared with conventional Sanken devices)
- The output-voltage-variable type can vary its output voltage from 1V to 14V because of its low reference voltage (Vref) of 1V.
- Wide Input Voltage Range (8 to 50V)
- Output ON/OFF available
- Built-in overcurrent protection and thermal protection circuits

■Absolute Maximum Ratings

Parameter	Symbol	Ratings	Unit
DC Input Voltage	V_{IN}	53	V
Power Dissipation	P_D*1	1	W
Junction Temperature	T_j	+125	°C
Storage Temperature	T_{stg}	–40 to +125	°C
Thermal Resistance (junction to case)	$\theta_{j\text{-}c}$	28	°C/W
Thermal Resistance (junction to ambient air)	$\theta_{j\text{-}a}$	100	°C/W

*1: Limited by thermal protection.

■Applications

- Onboard local power supplies
- OA equipment
- For stabilization of the secondary-side output voltage of switching power supplies

■Recommended Operating Conditions

Parameter	Symbol	Ratings	Unit
		SI-8010GL	
DC Input Voltage Range	V_{IN}	(8 or V_O+3)*1 to 50	V
Output Voltage Range	V_O	1 to 14	V
Output Current Range	I_O	0.02 to 1.5*2	A
Operating Junction Temperature Range	T_{jop}	–30 to +125	°C
Operating Temperature Range	T_{op}	–30 to +125	°C

*1: The minimum value of an input voltage range is the higher of either 8V or V_O+3V.
*2: Please be sure to let the output current run more than 20 mA. When using by less than 20 mA, there is a possibility that the output voltage becomes unstable.

■Electrical Characteristics

(T_a=25°C)

Parameter		Symbol	Ratings			Unit
			SI-8010GL (Variable type)			
			min.	typ.	max.	
Reference Voltage		V_{REF}	0.97	1.00	1.03	V
		Conditions	V_{IN}=12V, I_O=1A			
Efficiency		Eff		86		%
		Conditions	V_{IN}=20V, I_O=1A, V_O=5V			
Oscillation Frequency		F_{OSC}		250		kHz
		Conditions	V_{IN}=12V, I_O=1A			
Line Regulation		ΔV_{OLINE}		20	40	mV
		Conditions	V_{IN}=10 to 30V, I_O=1A			
Load Regulation		ΔV_{OLOAD}		10	30	mV
		Conditions	V_{IN}=12V, I_O=0.1 to 1.5A			
Temperature Coefficient of Reference Voltage		$\Delta V_{REF}/\Delta T_a$		±0.5		mV/°C
Overcurrent Protection Starting Current		I_S	1.6			A
		Conditions	V_{IN}=12V			
Quiescent Circuit Current		I_q		7		mA
		Conditions	V_{IN}=12V, I_O=0A			
Circuit Current at Output OFF		$I_{q(OFF)}$			400	μA
		Conditions	V_{IN}=12V, $V_{ON/OFF}$=0.3V			
CE/SS* Terminal	Low Level Voltage	V_{SSL}			0.5	V
	Terminal Outflow Current at Low Voltage	I_{SSL}			50	μA
		Conditions	V_{SSL}=0V			

*: Pin 2 is the CE/SS pin. Soft start at power on can be performed with a capacitor connected to this pin.The output can also be turned ON/OFF with this pin. The output is stopped by setting the voltage of this pin to V_{SSL} or lower. CE/SS-pin voltage can be changed with an open-collector drive circuit of a transistor.
When using both the soft-start and ON/OFF functions together, the discharge current from C_4 flows into the ON/OFF control transistor. Therefore, limit the current securely to protect the transistor if C_3 capacitance is large. The CE/SS pin is pulled up to the power supply in the IC, so applying the external voltage is prohibited.

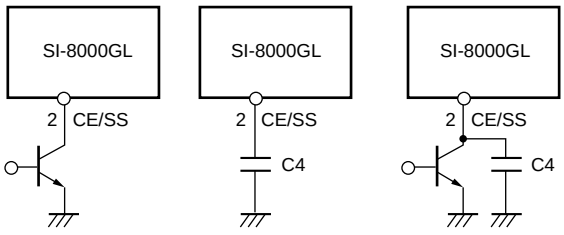

V_O. ON/OFF | Soft start | Soft start +V_O. ON/OFF

■External Dimensions (DIP8)

(Unit: mm)

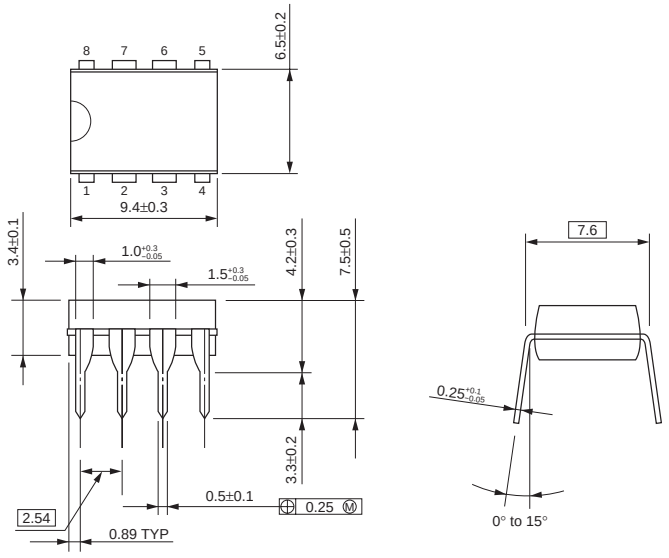

Pin Assignment
1. GND
2. CE/SS
3. Reg
4. SW_{OUT}
5. V_{IN}
6. B.S
7. Comp
8. V_{REF}

Plastic Mold Package Type
Flammability: UL 94V-0
Product Mass: Approx. 0.49 g

■Block Diagram

SI-8010GL

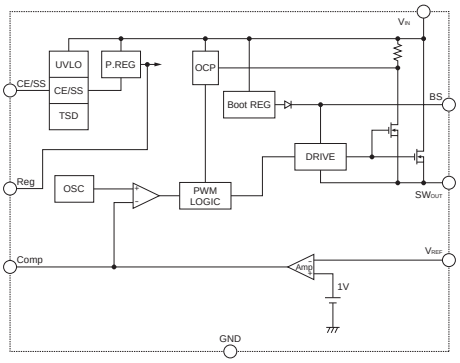

■T_a-P_D Characteristics

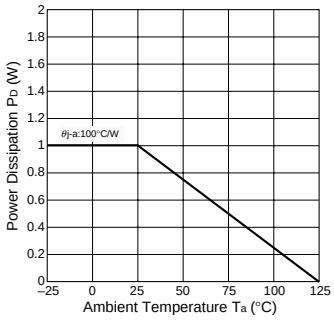

$$P_D = V_O \cdot I_O \left(\frac{100}{\eta\chi} - 1 \right) - V_F \cdot I_O \left(1 - \frac{V_O}{V_{IN}} \right)$$

Note 1: The efficiency depends on the input voltage and the output current. Therefore, obtain the value from the efficiency graph and substitute the percentage in the formula above.

Note 2: Thermal design for D_1 must be considered separately.

V_O : Output voltage
V_{IN} : Input voltage
I_O : Output current
$\eta\chi$: Efficiency
V_F : Diode D_1 forward voltage
RK16···0.4V(Ib=1A)

■Typical Connection Diagram

SI-8010GL

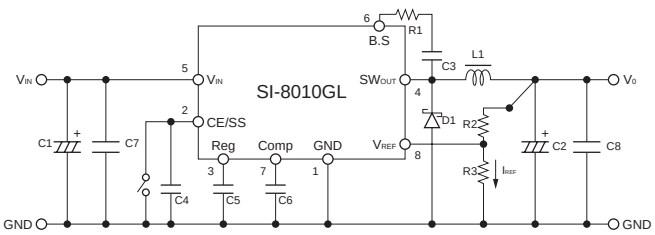

C1: 220μF/63V
C2: 470μF/25V
C3: 0.1μF
C4: 1000pF
C5: 0.1μF
C6: 0.047μF
C7: 0.1μF
C8: 0.1μF
R1: 47Ω
L1: 47μH
D1: RK16
(Sanken)

$$R2 = \frac{(V_{OUT} - V_{REF})}{I_{REF}} = \frac{(V_{OUT} - 1)}{2\times10^{-3}} (\Omega),\ R3 = \frac{V_{REF}}{I_{REF}} = \frac{1}{2\times10^{-3}} \fallingdotseq 500(\Omega)$$

Diode D_1
- Be sure to use a Schottky-barrier diode as D_1. If other diodes like fast recovery diodes are used, IC may be destroyed because of the reverse voltage generated by the recovery voltage or ON voltage.

Choke coil L_1
- If the winding resistance of the choke coil is too high, the efficiency may drop below the rated value.
- As the overcurrent protection starting current is approx. 2.5 A, take care concerning heat radiation from the choke coil caused by magnetic saturation due to overload or short-circuited load.

Capacitor C_1, C_2
- As large ripple currents flow through C_1 and C_2, use high-frequency and low-impedance capacitors aiming for switching-mode-power-supply use. Especially when the impedance of C_2 is high, the switching waveform may become abnormal at low temperatures. For C_2, do not use a capacitor with an extremely low equivalent series resistance (ESR) such as an OS capacitor or a tantalum capacitor, which may cause an abnormal oscillation.

Resistors R_2, R_3
- R_2 and R_3 are the resistors to set the output voltage. Set their values so that I_{REF} becomes approx. 2 mA. Obtain R_2 and R_3 values by the following formula above.

* To create the optimum operating conditions, place the components as close as possible to each other.

SI-8000S Series Full-Mold, Separate Excitation Step-down Switching Mode Regulator ICs

■Features

- Compact full-mold package (equivalent to TO220)
- Output current: 3.0A
- High efficiency: 79 to 91%
- Requires only 4 discrete components
- Internally-adjusted phase correction and output voltage
- Built-in reference oscillator (60kHz)
- Built-in overcurrent and thermal protection circuits
- Built-in soft start circuit (Output ON/OFF available)

■Applications

- Power supplies for telecommunication equipment
- Onboard local power supplies

■Lineup

Part Number	SI-8033S	SI-8050S	SI-8090S	SI-8120S	SI-8150S
V_O(V)	3.3	5.0	9.0	12.0	15.0
I_O(A)	3.0				

■Absolute Maximum Ratings

Parameter	Symbol	Ratings	Unit
DC Input Voltage	V_{IN}	43*	V
Power Dissipation	P_{D1}	18(With infinite heatsink)	W
	P_{D2}	1.5(Without heatsink, stand-alone operation)	W
Junction Temperature	T_j	+125	°C
Storage Temperature	T_{stg}	–40 to +125	°C
SW Terminal Applied Reverse Voltage	V_{SW}	–1	V
Thermal Resistance(junction to case)	$\theta_{j\text{-}c}$	5.5	°C/W

*35V for SI-8033S

■Recommended Operating Conditions

Parameter	Symbol	Ratings					Unit
		SI-8033S	SI-8050S	SI-8090S	SI-8120S	SI-8150S	
DC Input Voltage Range	V_{IN}	5.5 to 28	7 to 40	12 to 40	15 to 40	18 to 40	V
Output Current Range	I_O	0 to 3.0					A
Operating Junction Temperature Range	T_{jop}	–30 to +125					°C

■Electrical Characteristics

(T_a=25°C)

Parameter		Symbol	Ratings															Unit
			SI-8033S			SI-8050S			SI-8090S			SI-8120S			SI-8150S			
			min.	typ.	max.	min.	typ.	max.	min.	typ.	max.	min.	typ.	max.	min.	typ.	max.	
Output Voltage	SI-8000S*1	V_O	3.17	3.30	3.43	4.80	5.00	5.20	8.55	9.00	9.45	11.50	12.00	12.50	14.25	15.00	15.75	V
	SI-8000SS		3.234	3.30	3.366	4.90	5.00	5.10	———			———			———			
		Conditions	V_{IN}=15V, I_O=1.0A			V_{IN}=20V, I_O=1.0A			V_{IN}=21V, I_O=1.0A			V_{IN}=24V, I_O=1.0A			V_{IN}=25V, I_O=1.0A			
Efficiency		η		79			84			88			90			91		%
		Conditions	V_{IN}=15V, I_O=1.0A			V_{IN}=20V, I_O=1.0A			V_{IN}=21V, I_O=1.0A			V_{IN}=24V, I_O=1.0A			V_{IN}=25V, I_O=1.0A			
Oscillation Frequency		f		60			60			60			60			60		kHz
		Conditions	V_{IN}=15V, I_O=1.0A			V_{IN}=20V, I_O=1.0A			V_{IN}=21V, I_O=1.0A			V_{IN}=24V, I_O=1.0A			V_{IN}=25V, I_O=1.0A			
Line Regulation		ΔV_{OLINE}		25	80		40	100		50	120		60	130		60	130	mV
		Conditions	V_{IN}=8 to 28V, I_O=1.0A			V_{IN}=10 to 30V, I_O=1.0A			V_{IN}=15 to 30V, I_O=1.0A			V_{IN}=18 to 30V, I_O=1.0A			V_{IN}=21 to 30V, I_O=1.0A			
Load Regulation		ΔV_{OLOAD}		10	30		10	40		10	40		10	40		10	40	mV
		Conditions	V_{IN}=15V, I_O=0.5 to 1.5A			V_{IN}=20V, I_O=0.5 to 1.5A			V_{IN}=21V, I_O=0.5 to 1.5A			V_{IN}=24V, I_O=0.5 to 1.5A			V_{IN}=25V, I_O=0.5 to 1.5A			
Temperature Coefficient of Output Voltage		$\Delta V_O/\Delta T_a$		±0.5			±0.5			±1.0			±1.0			±1.0		mV/°C
Overcurrent Protection Starting Current		I_{S1}	3.1			3.1			3.1			3.1			3.1			A
		Conditions	V_{IN}=15V			V_{IN}=20V			V_{IN}=21V			V_{IN}=24V			V_{IN}=25V			

*1: "S" may be printed to the right of the marking (except SI-8090S, SI-8120S, SI-8150S).

■External Dimensions (TO220F-5)

(Unit : mm)

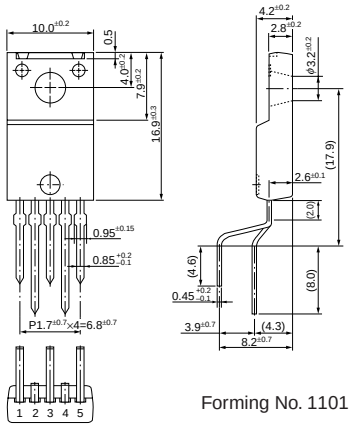

Forming No. 1101

Pin Assignment
① V_{IN}
② SW_{OUT}
③ GND
④ V_{OS}
⑤ S.S

Plastic Mold Package Type
Flammability: UL94V-0
Product Mass: Approx. 2.3g

■Block Diagram

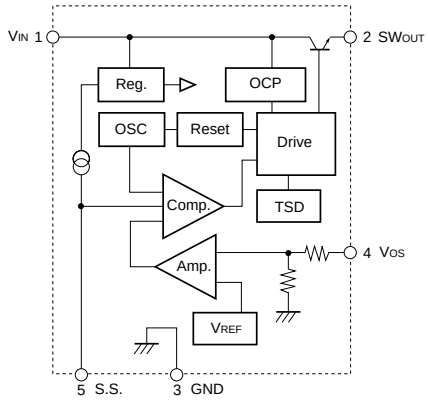

■Typical Connection Diagram

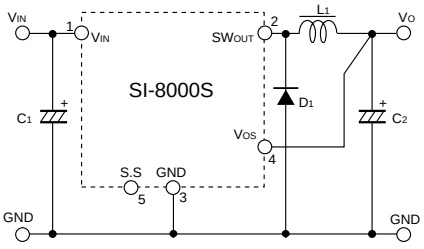

$C_{1,2}$: 1000μF
L_1 : 150μH
D_1 : RK46(Sanken)

■T_a-P_D Characteristics

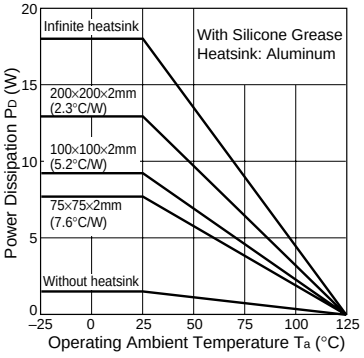

$$P_D = V_O \cdot I_O \left(\frac{100}{\eta\chi} - 1\right) - V_F \cdot I_O \left(1 - \frac{V_O}{V_{IN}}\right)$$

The efficiency depends on the input voltage and the output current. Therefore, obtain the value from the efficiency graph and substitute the percentage in the formula above.

V_O : Output voltage
V_{IN} : Input voltage
I_O : Output current
$\eta\chi$: Efficiency (%)
V_F : Diode D_1 forward voltage 0.5V(RK46)

Thermal design for D_1 must be considered separately.

SI-8100QL Series Current Mode Control Step-down Switching Mode Regulator ICs

■Features

- DIP8 package
- Introduction of current mode control method
- Output current: 3.5A
- High efficiency: 90% (Vo=5V)
- Built-in reference oscillator (350kHz)
- Built-in drooping-type overcurrent and thermal protection circuits
- Built-in soft start circuit
- Built-in on/off function (Active Hi)
- Low current consumption during off

■Applications

- DVD recorder, FPD-TV
- Onboard local power supplies
- OA equipment

■Absolute Maximum Ratings

Parameter	Symbol	Ratings	Unit	Conditions
Input Voltage	V_{IN}	30	V	
Power Dissipation*1	P_D	1.56	W	When mounted on glass-epoxy board measuring 70×60 mm (copper laminate area: 1310 mm²)
Junction Temperature*2	Tj	–30 to +150	°C	
Storage Temperature	Tstg	–40 to +150	°C	
Thermal Resistance (Junction to Case)	θj-c	25	°C/W	
Thermal Resistance (Junction to Ambient Air)	θj-a	64	°C/W	When mounted on glass-epoxy board measuring 70×60 mm (copper laminate area: 1310 mm²)

*1: Limited by thermal protection circuit
*2: Note that the detect temperature for thermal protection is about 140°C.

■Recommended Operating Conditions

Parameter	Symbol	Ratings	Unit	Conditions
		SI-8105QL		
Input Voltage Range	V_{IN}	Vo+3*1 to 28	V	
Output Voltage Range	Vo	0.5 to 24	V	
Output Current Range	Io	0 to 3.5	A	
Operating Junction Temperature Range	Tjop	–30 to +125	°C	
Operating Temperature Range	Top	–30 to +85	°C	

*1: The minimum value of the input voltage range is 4.75 V or Vo +3 V, whichever is higher.

■Electrical Characteristics

(When Ta=25°C and Vo=5V)

Parameter		Symbol	Ratings SI-8105QL min.	typ.	max.	Unit
Reference Voltage		V_{ADJ}	0.485	0.500	0.515	V
		Conditions	V_{IN}=12V, Io=1A			
Temperature Coefficient of Reference Voltage		($\Delta V_{ADJ}/\Delta T$)		0.05		mV/°C
		Conditions	V_{IN}=12V, Io=1A, Ta=–40 to +85°C			
Efficiency		η		90		%
		Conditions	V_{IN}=12V, Io=1A			
Oscillation Frequency		fo	315	350	385	kHz
		Conditions	V_{IN}=16V, Io=1A			
Line Regulation		ΔV_{OLINE}		30	60	mV
		Conditions	V_{IN}=8 to 28V, Io=1A			
Load Regulation		ΔV_{OLOAD}		30	60	mV
		Conditions	V_{IN}=12V, Io=0.1 to 3.5A			
Overcurrent Protection Starting Current		Is	3.6		6.0	A
		Conditions	V_{IN}=12V			
Quiescent Circuit Current		Iq		18		mA
		Conditions	V_{IN}=12V, Io=0A, V_{EN}=open			
		$I_{q(OFF)}$			20	µA
		Conditions	V_{IN}=12V, Io=0A, V_{EN}=0V			
SS Pin	Outflow Current at Low Voltage	I_{SSL}		5		µA
		Conditions	V_{IN}=12V, V_{SSL}=0V			
EN Pin	High Level Voltage	$V_{C/EH}$	2.8			V
		Conditions	V_{IN}=12V			
	Low Level Voltage	$V_{C/EL}$			2.2	V
		Conditions	V_{IN}=12V			
	Inflow Current at Low Voltage	$I_{C/EH}$		5		µA
		Conditions	V_{EN}=0V			
Error Amplifier Voltage Gain		AEA		1000		V/V
Error Amplifier Transformer Conductance		GEA		800		µA/V
Current Sense Amplifier Impedance		1/GCS		0.35		V/A
Maximum ON Duty		DMAX		92		%
Minimum ON Time		DMIN		100		nsec.

*: Pin 8 is the SS pin. Soft start at power on can be performed with a capacitor connected to this pin.
The SS pin is pulled up to the power supply in the IC, so applying the external voltage is prohibited.

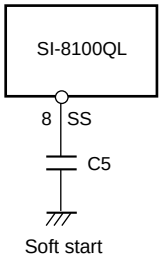

■External Dimensions (DIP8)

(Unit : mm)

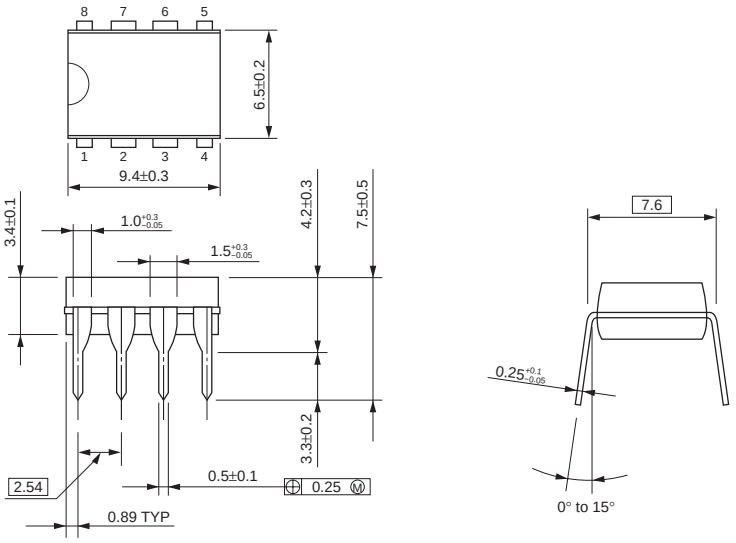

Pin Assignment
① BS
② IN
③ SW
④ GND
⑤ FB
⑥ COMP
⑦ EN
⑧ SS

Plastic Mold Package Type
Flammability: UL 94V-0
Product Mass: Approx. 0.49 g

■Block Diagram

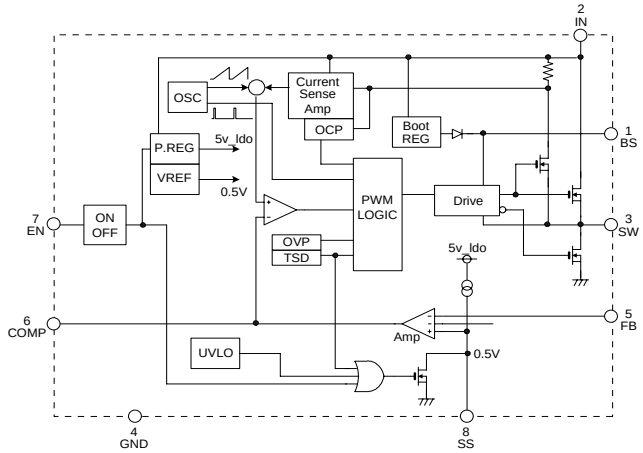

■Typical Connection Diagram

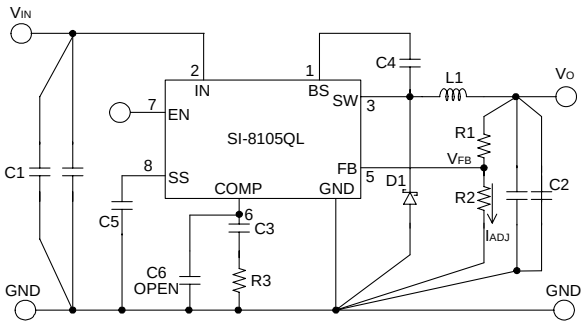

C1:10μ F/50V
(Murata: GRM55DB31H106KA87)
C2:22μ F/16V
(Murata: GRM32ER71A226KE20)
C3:560pF
(Murata: GRM18 Type)
C4:10nF
(Murata: GRM18 Type)
C5:10nF
(Murata: GRM18 Type)
L1:10μ H
D1:SPB-G56S (Sanken)
SJPB-L4 (Sanken)
R1:46kΩ (When Vo = 5 V)
R2:5.1kΩ
R3:24kΩ

SI-8000FFE Series Full-Mold, Separate Excitation Step-down Switching Mode Regulator ICs

■Features

- Output current: 3.5 A
- High efficiency: 83% (Vo = 5 V, V_{IN} = 15 V, Io = 2 A)
- Requires only 6 discrete components
- Built-in reference oscillator (300 kHz)
- Built-in drooping-type overcurrent and thermal protection circuits
- Built-in soft start circuit (Output ON/OFF available)

■Applications

- DVD recorder, FPD-TV
- OA equipment, such as printers
- Onboard local power supplies

■Lineup

Part Number	SI-8001FFE
Vo (V)	Variable (0.8 to 24)
Io (A)	3.5
Package	TO220F-5
Function	Soft start

■Absolute Maximum Ratings

Parameter	Symbol	Ratings	Unit	Conditions
		SI-8001FFE		
Input Voltage	V_{IN}	43	V	
Power Dissipation (With infinite heatsink)	P_{D1-1}	22.7	W	Limited by thermal protection circuit, T_j=150°C
	P_{D1-2}	18.2		T_j=125°C
Power Dissipation (Without heatsink)	P_{D2-1}	2.15	W	Limited by thermal protection circuit, T_{jmax}=150°C
	P_{D2-2}	1.72		T_j=125°C
Junction Temperature*1	T_j	+150	°C	
Storage Temperature	T_{stg}	–40 to +150	°C	
Thermal Resistance (Junction to Case)	θ_{j-c}	5.5	°C/W	
Thermal Resistance (Junction to Ambient Air)	θ_{j-a}	58	°C/W	

*: This product has built-in thermal protection circuits that may activate when the junction temperature exceeds 130°C. The recommended design for the junction temperature during IC operation is below 125°C.

■Recommended Operating Conditions

Parameter	Symbol	Ratings	Unit
		SI-8001FFE	
Input Voltage Range	V_{IN}	Vo+3*1 to 40	V
Output Voltage Range	V_O	0.8 to 24	V
Output Current Range	I_O	0 to 3.5	A
Operating Junction Temperature Range	T_{jop}	–30 to +125	°C
Operating Temperature Range	T_{op}	–30 to +85	°C

*: The minimum value of the input voltage range is 4.5 V or Vo +3 V, whichever is higher.

■Electrical Characteristics

(R1=4.2kΩ, R2=0.8kΩ when Ta=25°C and Vo=5V)

Parameter		Symbol		Ratings			Unit
				SI-8001FFE			
				min.	typ.	max.	
Reference Voltage		V_{ADJ}		0.784	0.800	0.816	V
			Conditions	V_{IN}=15V, Io=0.2A			
Temperature Coefficient of Reference Voltage		$\Delta V_{ADJ}/\Delta T$			±0.1		mV/°C
			Conditions	V_{IN}=15V, Io=0.2A, Tc=0 to 100°C			
Efficiency		η			83		%
			Conditions	V_{IN}=15V, Io=2A			
Oscillation Frequency		fo		270	300	330	kHz
			Conditions	V_{IN}=15V, Io=2A			
Line Regulation		ΔV_{OLINE}			55	80	mV
			Conditions	V_{IN}=10 to 30V, Io=2A			
Load Regulation		ΔV_{OLOAD}			15	50	mV
			Conditions	V_{IN}=15V, Io=0.2 to 3.5A			
Overcurrent Protection Starting Current		I_S		3.6			A
			Conditions	V_{IN}=15V			
SS Pin	Low Level Voltage	V_{SSL}				0.5	V
	Outflow Current at Low Voltage	I_{SSL}			6	30	µA
			Conditions	V_{IN}=15V, V_{SS}=0V			
Quiescent Circuit Current		I_q			6		mA
			Conditions	V_{IN}=15V, Io=0A			
		$I_{q(OFF)}$			200	600	µA
			Conditions	V_{IN}=15V, Vss=0V			

*: Pin 5 is the SS pin. Soft start at power on can be performed with a capacitor connected to this pin. The output can also be turned ON/OFF with this pin.
The output is stopped by setting the voltage of this pin to VSSL or lower. SS-pin voltage can be changed with an open-collector drive circuit of a transistor. When using both the soft-start and ON/OFF functions together, the discharge current from C3 flows into the ON/OFF control transistor. Therefore, limit the current securely to protect the transistor if C3 capacitance is large. The SS pin is pulled up (3.7 V typ.) to the power supply in the IC, so applying the external voltage is prohibited. If this pin is not used, leave it open.

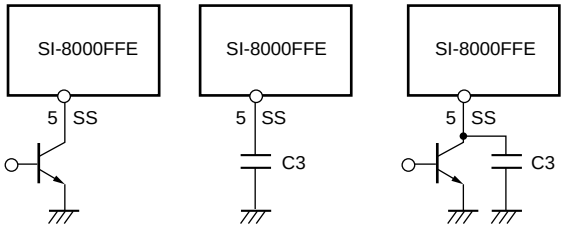

Vo.ON/OFF | Soft start | Soft start +Vo. ON/OFF

■External Dimensions (TO220F-5)

(Unit : mm)

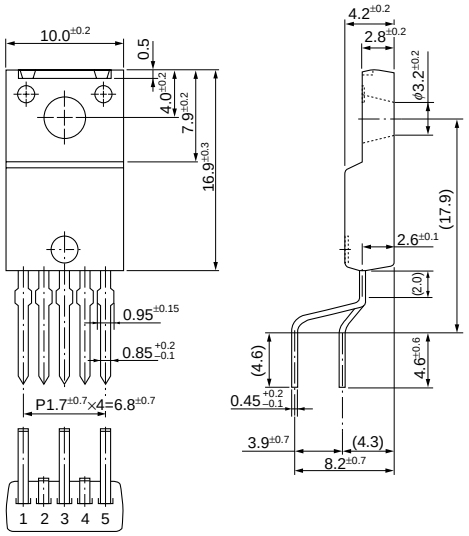

Pin Assignment

① IN
② SW
③ GND
④ ADJ
⑤ SS

Plastic Mold Package Type

Flammability: UL 94V-0

Product Mass: Approx. 2.3 g

■Block Diagram

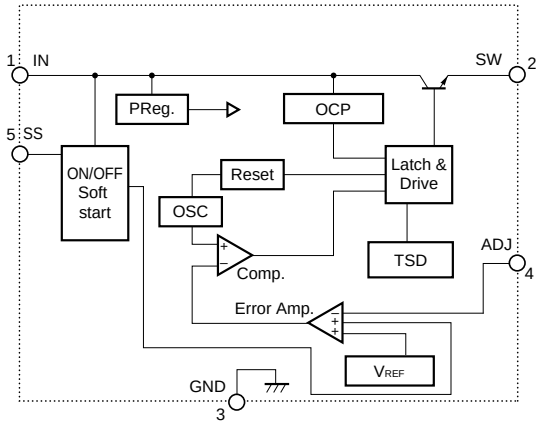

■Typical Connection Diagram

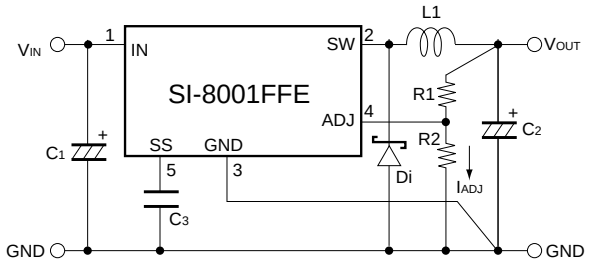

C_1 :470µF
C_2 :680µF
C_3 :0.1µF(Only when using soft-start function)
L_1 :47µH
D_1 :RK46(Sanken)

SI-8000HFE Series Full-Mold, Separate Excitation Step-down Switching Mode Regulator ICs

■Features

- Compact full-mold package (equivalent to TO220)
- Output current: 5.5 A
- High efficiency: 83% typ. (at Vo = 5 V)
- Requires only 4 discrete components
- Built-in reference oscillator (150 kHz)
- Built-in drooping-type-overcurrent and thermal protection circuits
- Built-in soft start circuit (Output ON/OFF available)

■Applications

- Onboard local power supplies
- OA equipment

■Lineup

Part Number	SI-8008HFE	SI-8050HFE
V_O (V)	Variable (0.8 to 15)	5
I_O (A)	5.5	

■Absolute Maximum Ratings

Parameter	Symbol	Ratings	Unit	Conditions
DC Input Voltage	V_{IN}	43	V	
Power Dissipation	P_{D1-1}	25 (with infinite heatsink)	W	Limited by thermal protection, T_{jmax}=150°C
	P_{D1-2}	20 (with infinite heatsink)		T_{jmax}=125°C
	P_{D2-1}	2.15 (without heat sink, standalone operation)		Limited by thermal protection, T_{jmax}=150°C
	P_{D2-2}	1.72 (without heatsink, standalone operation)		T_{jmax}=125°C
Junction Temperature*	T_j	+150	°C	
Storage Temperature	T_{stg}	–40 to +150	°C	
Thermal Resistance (Junction to Case)	θ_{j-c}	5	°C/W	
Thermal Resistance (Junction to Ambient Air)	θ_{j-a}	58	°C/W	

*: This product has built-in thermal protection circuits that may operate when the junction temperature rises above 130°C. The recommended design for the junction temperature during operation is below 125°C.

■Recommended Operating Conditions

Parameter	Symbol	Ratings		Unit
		SI-8008HFE	SI-8050HFE	
Input Voltage Range	V_{IN}	Vo+3*1 to 40	8 to 40	V
Output Voltage Range	V_O	0.8 to 24	5.0	V
Output Current Range	I_O	0 to 5.5		A
Operating Junction Temperature Range	T_{jop}	–30 to +125		°C
Operating Temperature Range	T_{op}	–30 to +85		°C

*1: The minimum value of an input voltage range is the higher of 4.5 V or V_O + 3 V.

■Electrical Characteristics

(T_a=25°C)

Parameter		Symbol		Ratings SI-8008HFE (at Vo = 5 V) min.	typ.	max.	Ratings SI-8050HFE min.	typ.	max.	Unit
Output Voltage (Reference Voltage)		Vo (V_{ADJ})					4.90	5.00	5.10	V
				0.784	0.800	0.816				
			Conditions	V_{IN}=15V, I_o=1A			V_{IN}=15V, I_o=1A			
Temperature Coefficient of Output Voltage (Temperature Coefficient of Reference Voltage)		ΔVo/ΔT ($\Delta V_{ADJ}/\Delta T$)						±0.5		mV/°C
					±0.1					
			Conditions	V_{IN}=15V, I_o=1A, T_c=0 to 100°C			V_{IN}=15V, I_o=1A, T_c=0 to 100°C			
Efficiency		η			83			83		%
			Conditions	V_{IN}=15V, I_o=3A			V_{IN}=15V, I_o=3A			
Oscillation Frequency		fo			150			150		kHz
			Conditions	V_{IN}=15V, I_o=3A			V_{IN}=15V, I_o=3A			
Line Regulation		ΔV_{OLINE}			60	80		60	80	mV
			Conditions	V_{IN}=10 to 30V, I_o=3A			V_{IN}=10 to 30V, I_o=3A			
Load Regulation		ΔV_{OLOAD}			20	50		20	50	mV
			Conditions	V_{IN}=15V, I_o=0.2 to 3A			V_{IN}=15V, I_o=0.2 to 3A			
Overcurrent Protection Starting Current		I_S		5.6			5.6			A
			Conditions	V_{IN}=15V			V_{IN}=15V			
ON/OFF Pin*	Low Level Voltage	V_{SSL}				0.5			0.5	V
	Outflow Current at Low Voltage	I_{SSL}			10	30		10	30	µA
			Conditions	V_{SSL}=0V			V_{SSL}=0V			
Quiescent Circuit Current		I_q			6			6		mA
			Conditions	V_{IN}=15V, I_o=0A			V_{IN}=15V, I_o=0A			
		$I_{q(OFF)}$			200	400		200	400	µA
			Conditions	V_{IN}=15V, V_{SS}=0V			V_{IN}=15V, V_{SS}=0V			

*: Pin 5 is the SS pin. Soft start at power on can be performed with a capacitor connected to this pin. The output can also be turned ON/OFF with this pin. The output is stopped by setting the voltage of this pin to VSSL or lower. SS-pin voltage can be changed with an open-collector drive circuit of a transistor. When using both the soft-start and ON/OFF functions together, the discharge current from C3 flows into the ON/OFF control transistor. Therefore, limit the current securely to protect the transistor if C3 capacitance is large. The SS pin is pulled up to the power supply in the IC, so applying the external voltage is prohibited. If the pin is not used, leave it open.

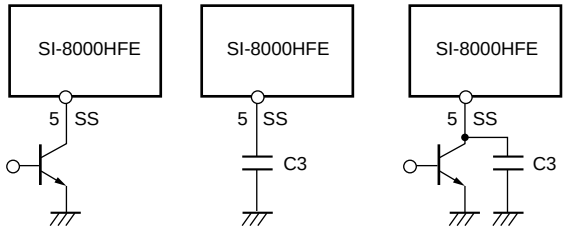

$V_{OUT.}$ ON/OFF　　Soft start　　Soft start +$V_{OUT.}$ ON/OFF

■External Dimensions (TO220F-5)

(Unit : mm)

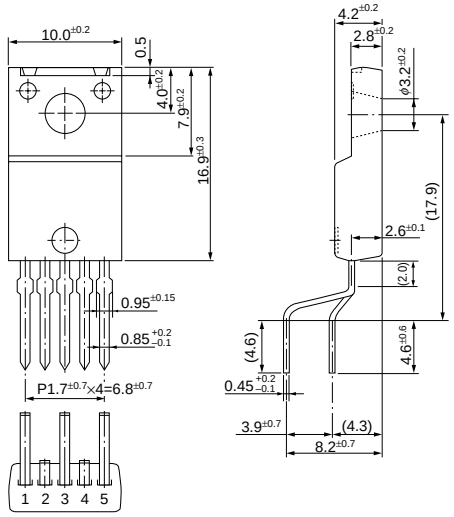

Pin Assignment
① V_{IN}
② SW
③ GND
④ ADJ (V_{OS} for SI-8050HFE)
⑤ SS

Plastic Mold Package Type
Flammability: UL94V-0
Product Mass: Approx. 2.3g

■Block Diagram

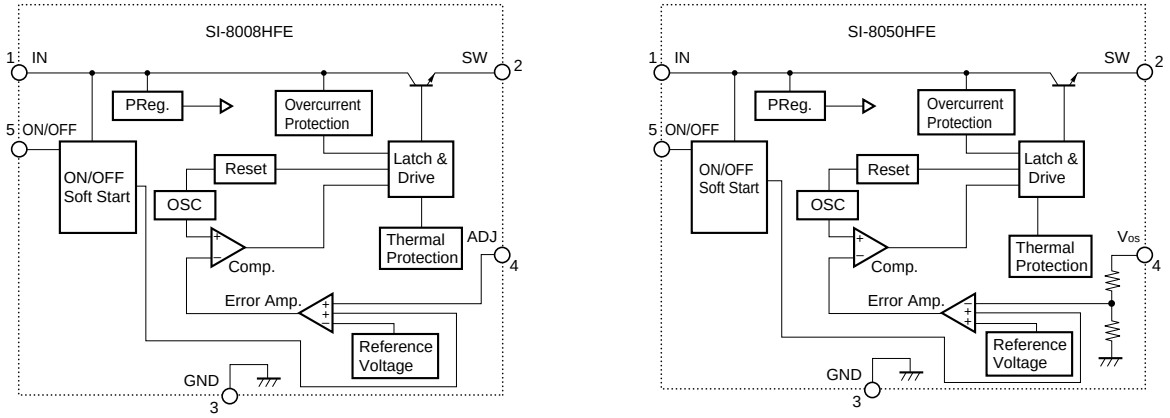

■Typical Connection Diagram

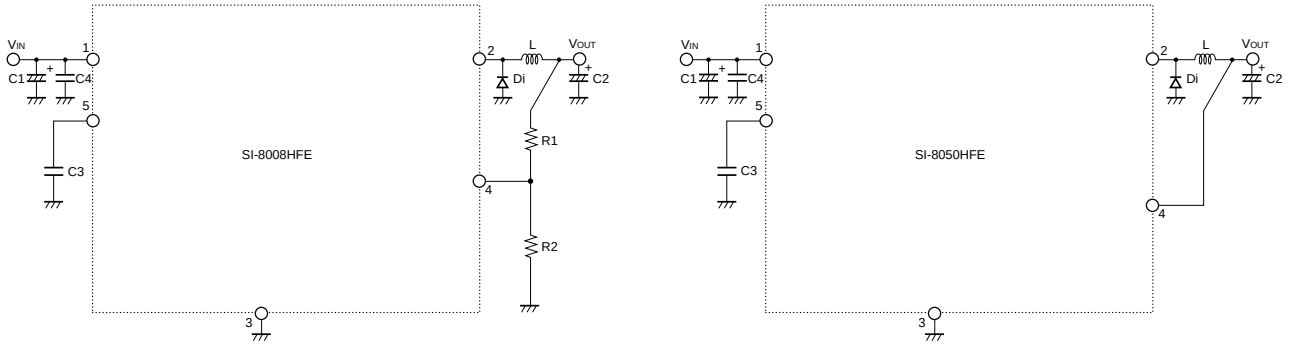

C_1 : 1500μF
C_2 : 1000μF
C_3 :1μF (Only when using soft-start function)
C_4 :4.7μF (RPER11H475K5 (Murata Manufacturing) recommended)
L_1 :100μH
Di : FMB-G16L (Sanken)

SI-8000Y Series Current Mode Control Step-down Switching Mode Regulator ICs

■Features

- Compact (equivalent to TO220) full-mold package
- Output current: 8.0 A
- High efficiency: 86 to 94%
- Built-in reference oscillator (130 kHz)
- Built-in drooping-type-overcurrent protection and thermal protection circuits
- Built-in soft start circuit (Output ON/OFF available)
- Low current consumption during off

■Applications

- AV equipment
- OA equipment
- Gaming equipment
- Onboard local power supplies

■Absolute Maximum Ratings

Parameter	Symbol	Ratings	Unit
Input Voltage	V_{IN}	45	V
Power Dissipation	P_{D1}	20.8(With infinite heatsink)	W
	P_{D2}	1.8(Without heatsink, stand-alone operation)	W
Junction Temperature	T_j	–30 to +150	°C
Storage Temperature	T_{stg}	–40 to +150	°C
Thermal Resistance (Junction to Case)	$\theta_{j\text{-}c}$	6	°C/W
Thermal Resistance (Junction to Ambient Air)	$\theta_{j\text{-}a}$	66.7	°C/W

■Recommended Operating Conditions

Parameter	Symbol	Raings		Unit
		SI-8010Y	SI-8050Y	
Input Voltage Range	V_{IN}	8 or V_O+3* to 43	8 to 43	V
Output Voltage Range	V_o	1 to 15	5	V
Output Current Range	I_o	0 to 8.0		A
Operating Junction Temperature Range	T_{jop}	–30 to +135		°C
Operating Temperature Range	T_{op}	–30 to +85		°C

*: The minimum value of the input voltage range is 8 V or Vo + 3V, whichever is higher.

■Electrical Characteristics

*(R1=8kΩ, R2=2kΩ when Ta=25°C and Vo=5V)

Parameter		Symbol	Ratings						Unit
			SI-8010Y*			SI-8050Y			
			min.	typ.	max.	min.	typ.	max.	
Output Voltage (Reference voltage for SI-8010Y)		$V_O(V_{REF})$	0.98	1.00	1.02	4.90	5.00	5.10	V
		Conditions	V_{IN}=30V, Io=0.1A			V_{IN}=30V, Io=0.1A			
Temperature Coefficient of Output Voltage (Reference voltage temperature coefficient for SI-8010Y)		$\Delta V_O/\Delta T(\Delta V_{REF}/\Delta T)$		±0.1			±0.5		mV/°C
		Conditions	V_{IN}=30V, Io=0.1A, Ta=0 to 100°C			V_{IN}=30V, Io=0.1A, Ta=0 to 100°C			
Efficiency		η		86			86		%
		Conditions	V_{IN}=30V, Io=3A			V_{IN}=30V, Io=3A			
Oscillation Frequency		f_o		130			130		kHz
		Conditions	V_{IN}=30V, Io=3A			V_{IN}=30V, Io=3A			
Line Regulation		ΔV_{OLINE}		30	90		30	90	mV
		Conditions	V_{IN}=10 to 43V, Io=3A			V_{IN}=10 to 43V, Io=3A			
Load Regulation		ΔV_{OLOAD}		30	90		30	90	mV
		Conditions	V_{IN}=30V, Io=0.1 to 8A			V_{IN}=30V, Io=0.1 to 8A			
Overcurrent Protection Starting Current		I_s	8.1			8.1			A
		Conditions	V_{IN}=20V			V_{IN}=20V			
Quiescent Circuit Current		I_q		8			8		mA
		Conditions	V_{IN}=30V, Io=0A, EN/SS=open			V_{IN}=30V, Io=0A, EN/SS=open			
		$I_{q(OFF)}$		200	500		200	500	μA
		Conditions	V_{IN}=30V, EN/SS=0V			V_{IN}=30V, EN/SS=0V			
EN/SS Pin*	Outflow Current at Low Voltage	I_{SSL}		10	30		10	30	μA
		Conditions	V_{IN}=30V, EN/SS=0V			V_{IN}=30V, EN/SS=0V			
	Low Level Voltage	V_{SSL}			0.5			0.5	V
		Conditions	V_{IN}=30V			V_{IN}=30V			
Error Amplifier Voltage Gain		AEA		300			300		V/V
Error Amplifier Transformer Conductance		GEA		800			800		μA/V
Current Sense Amplifier Impedance		1/GCS		0.16			0.16		V/A
Maximum ON Duty		DMAX		92			92		%
Minimum ON Time		DMIN		200			200		nsec

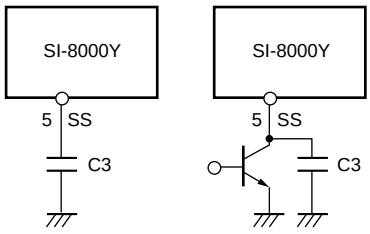

Soft start

Soft start
+VOUT. ON/OFF

■External Dimensions (TO220F-7)

(Unit : mm)

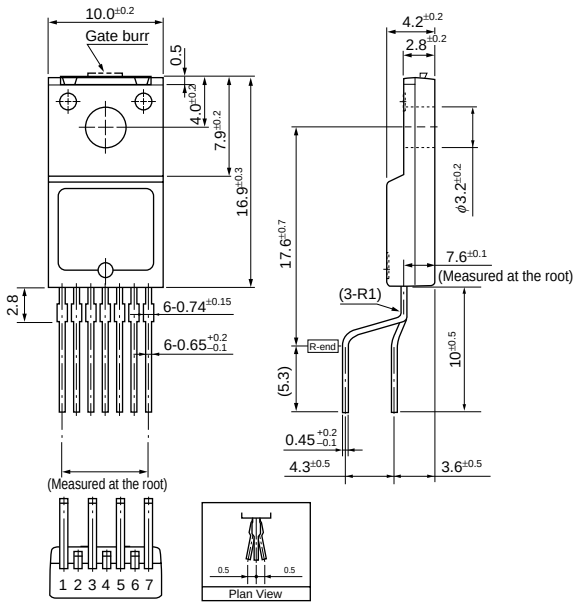

Pin Assignment
① BS
② SW
③ V_{IN}
④ GND
⑤ COMP
⑥ FB
⑦ EN/SS

Plastic Mold Package Type
Flammability: UL94V-0
Product Mass: Approx. 2.3g

■Block Diagram

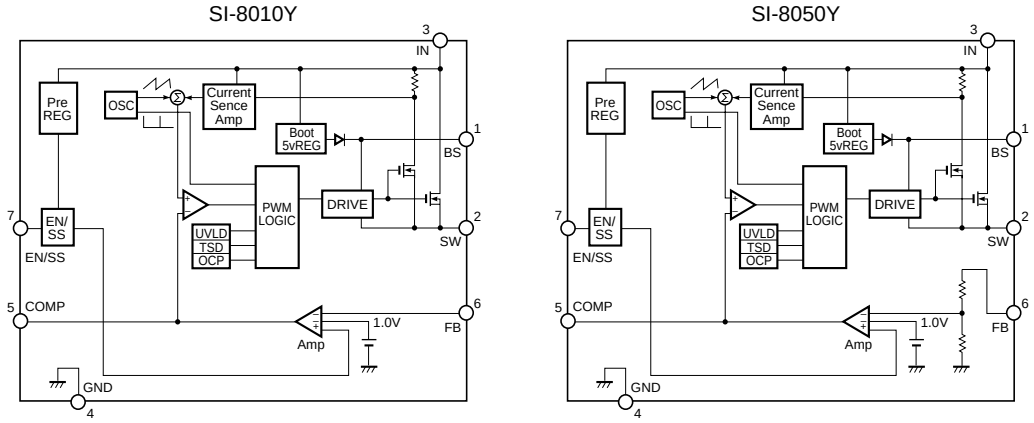

■Typical Connection Diagram

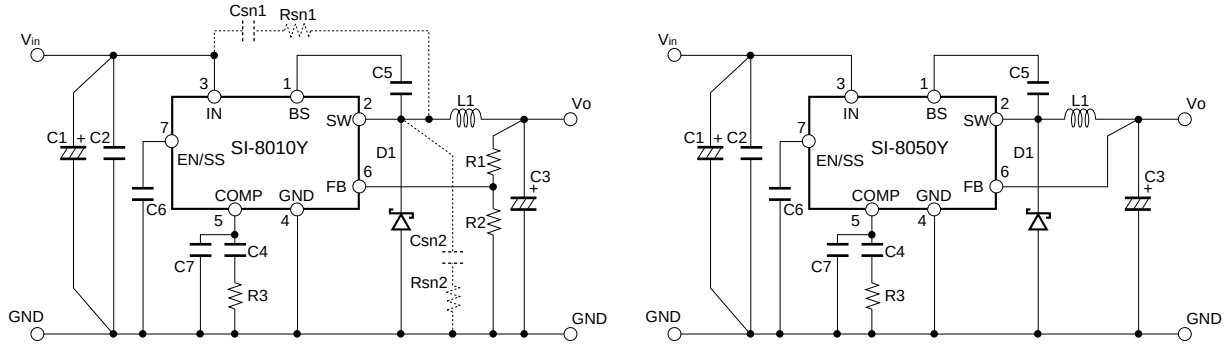

SI-8010Y
C1:2200μF/50V
C2:4.7μF/50V
C3:470μF/25V
C4:1200pF
C5:0.22μF/50V
C7:680pF
L1:47μH
D1:FMW-2106 (Sanken)
R1:8kΩ (When Vo=5V)
R2:2kΩ
R3:39kΩ

Csn1,2=2200pF (When Vin>40V)
Rsn1,2=10Ω (When Vin>40V)

SI-8050Y
C1:2200μF/50V
C2:4.7μF/50V
C3:470μF/25V
C4:1200pF
C5:0.22μF/50V
C7:680pF
L1:56μH
D1:FMW-2106 (Sanken)
R3:39kΩ

SI-8011NVS Surface-Mount, Synchronous Rectifier Step-down Switching Mode Regulator Control ICs

■Features

- Surface-mount package (TSSOP24)
- High efficiency due to synchronous rectification: 93% (at V_{IN} = 5V, I_O = 1A, V_O = 2.5V)
- Capable of downsize a choke-coil due to IC's high switching frequency (250kHz typ, On Time Control). (Compared with conventional Sanken devices)
- Low reference voltage (V_{ref}) of 1.1V. The output voltage is variable from 1.1V to 6V.
- High-speed response to a load
- Compatible with low ESR capacitors
- Soft start and output ON/OFF available
- Built-in overcurrent protection circuit
- PWRGD function to indicate the output voltage status
- High precision reference voltage: 1.1V ± 1.2%

■Absolute Maximum Ratings

(T_a=25°C)

Parameter	Symbol	Ratings	Unit
Control-System DC Input Voltage	V_{CC}	7	V
DC Input Voltage	V_{IN}	25	V
Boost Block Input Voltage	V_H	30	V
EN Terminal Input Voltage	V_{EN}	V_{CC}	V
PWRGD Terminal Applied Voltage	V_{PWRGD}	7	V
Junction Temperature	T_j	+150	°C
Storage Temperature	T_{stg}	–40 to +150	°C

■Applications

- Power supplies for notebook PCs and mobile devices
- Onboard local power supplies
- OA equipment
- For stabilization of the secondary-side output voltage of switching power supplies

■Recommended Operating Conditions

Parameter	Symbol	Ratings	Unit
Control System Input Voltage Range	V_{CC}	4.5 to 5.5	V
Input Voltage Range	V_{IN}	3 to 18	V
Output Voltage Range	V_O	1.1 to 6	V
Operating Temperature Range	T_{op}	–20 to +85	°C

■Electrical Characteristics

(T_a = 25°C unless otherwise specified)

Parameter		Symbol	Ratings			Unit	Conditions
			min.	typ.	max.		
Dynamic Characteristics	Output Voltage	V_O	–1.2%	1.1	+1.2%	V	V_{IN}=5V, V_{CC}=5V, VSNS connected to VO, I_O=0A
	Temperature Coefficient of Output Voltage	$\Delta V_O/\Delta T$		±0.03		mV/°C	V_{IN}=5V, V_{CC}=5V, VSNS connected to VO, I_O=0A, T_a=0 to 85°C
Circuit Current	Circuit Current (V_{CC} Terminal)	I_{op}			6	mA	V_{CC}=5V, EN=H, FADJ:open
	Circuit Current (V_{IN} Terminal)	I_{op}			1	mA	V_{IN}=5V, EN=H
	Standby Current 1 (V_{CC} Terminal)	I_{std1}			100	μA	V_{CC}=5V, EN=L
	Standby Current 2 (V_{IN} Terminal)	I_{std2}			50	μA	V_{IN}=5V, EN=L
Undervoltage Lockout	UVLO Operating Voltage 1 (V_{CC} Terminal)	V_{uvlo1}	3.7		4.4	V	V_{IN}=5V
	UVLO Operating Voltage 2 (V_{IN} Terminal)	V_{uvlo2}	2.5		2.9	V	V_{CC}=5V
On Time Control	On Time	T_{on}		2		μS	V_{CC}=5V, V_{IN}=5V, V_O=2.5V
	Minimum Off Time	T_{off}		1		μS	V_{CC}=5V
	REF Terminal Voltage	V_{ref}	1.1	1.2	1.3	V	V_{CC}=5V
	REF Terminal Source Current	I_{ref}			100	μA	V_{CC}=5V
High Side Drive	On Resistance (high side)	RonHH		5.5		Ω	VH-VLIN=5V
	On Resistance (low side)	RonHL		5.5		Ω	VH-VLIN=5V
Low Side Drive	On Resistance (high side)	RonLH		5.5		Ω	V_{CC}=5V
	On Resistance (low side)	RonLL		5.5		Ω	V_{CC}=5V
Bootstrap	Bootstrap Voltage	VH-VLIN	4.5	5	5.5	V	
Protection System	Current for Current Limit Detection	I_{lim}	90	100	110	μA	V_{CC}=5V, V_{IN}=5V
	Soft Start Terminal Current	I_{ss}		±20		μA	V_{CC}=5V
	EN Low Level Voltage	V_{celo}	0		0.8	V	V_{CC}=5V
	EN High Level Voltage	V_{cehi}	2.4		V_{CC}	V	V_{CC}=5V
	EN Bias Level Current	ICE			5	μA	V_{CC}=5V, EN=5V
	PWRGD Good Voltage (high side)	V_{sens}		1.32		V	V_{CC}=5V
	PWRGD Good Voltage (low side)	V_{sens}		0.88		V	V_{CC}=5V
	PWRGD Low Output Voltage	V_{pwrgd}			0.4	V	V_{CC}=5V, Ipwrgd=120μA
	PWRGD Terminal Current	I_{pwrgd}			120	μA	V_{CC}=5V, Vpwrgd=0.4V
	PWRGD Leakage Current	I_{pwrgd}			5	μA	Vpwrgd=5V

■External Dimensions (TSSOP24)

(Unit : mm)

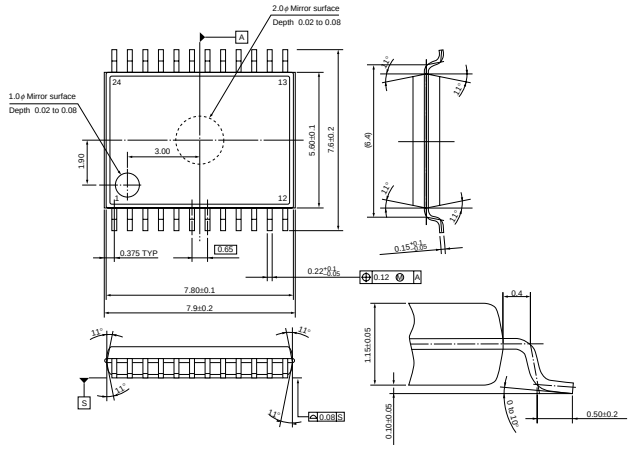

Plastic Mold Package Type
Flammability: UL94V-0
Product Mass: Approx. 1.36g

■Block Diagram (Pin Assignment)

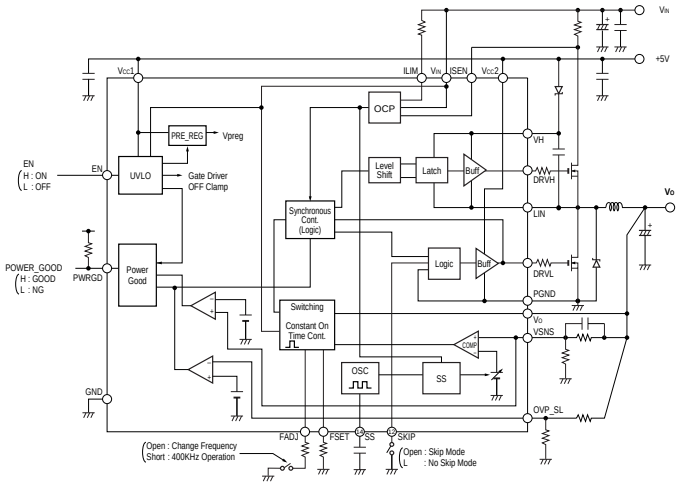

■Typical Connection Diagram

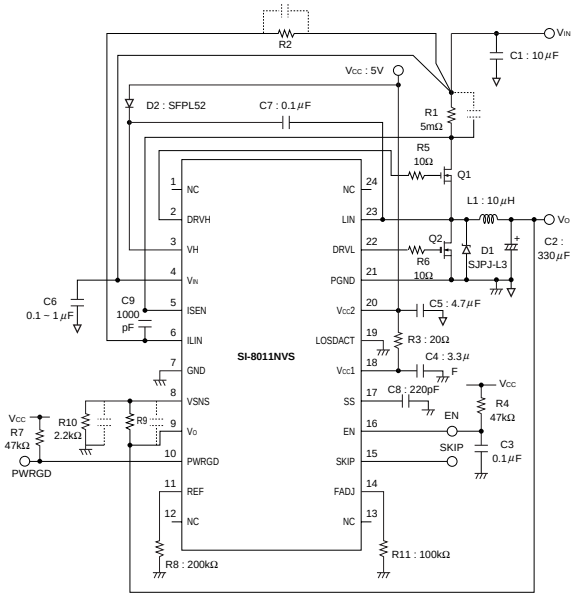

MOS FET Q_1, Q_2

- Be sure to use logic type MOS FET as Q_1 and Q_2.
  If you use a normal power MOS FET type, the ON resistance may not drop to a satisfactory level due to a shortage of V_{GS}. This may deteriorate the efficiency and cause overheating.

Diode D_1

- Be sure to use a Schottky-barrier diode for D_1.
  If other diodes like fast recovery diodes are used, IC may be destroyed because of the reverse voltage generated by the recovery voltage or ON voltage.

Choke coil L_1

- If the winding resistance of the choke coil is too high, the efficiency may drop below the rated value.
- Take care concerning heat radiation from the choke coil caused by magnetic saturation due to overload or short-circuit load.

Capacitor C_1, C_2

- As large ripple currents flow through C_1 and C_2, use high-frequency and low-impedance capacitors aiming for switching-mode-power-supply use. Especially when the impedance of C_2 is high, the switching waveform may become abnormal at low temperatures. For C_2, do not use a capacitor with an extremely low equivalent series resistance (ESR) such as a ceramic capacitor, which may cause an abnormal oscillation.

* To create the optimum operating conditions, place the components as close as possible to each other.

SI-8405NL Surface-Mount, Synchronous Rectifier Step-down Switching Mode Regulator Control ICs

■Features

- Input voltage (Vin): 3.0 to 5.5 V
- Synchronous rectification
- Output voltage precision ±1.2%
- Oscillation Frequency: 250 kHz
- Overcurrent protection (Overcurrent value can be set by the external resistor.)
- Output can be disabled
- Undervoltage Lock Out
- Soft start function
- High-speed load response

■Applications

- Power supply for LCD modules
- Power supply for notebook PC
- Onboard local power supplies
- Power supply for LBP/PPC

■Absolute Maximum Ratings

Parameter	Symbol	Ratings	Unit
Input Voltage (V_{IN} pin)	V_{IN}	6	V
EN/SS Pin Input Voltage	V_{EN}	–0.3 to V_{IN}	V
Junction Temperature	T_j	+125	°C
Storage Temperature	T_{stg}	–40 to +150	°C

■Recommended Operating Conditions

Parameter	Symbol	Ratings	Unit
Input Voltage Range	V_{IN}	3 to 5.5	V
Output Voltage Range	V_O	0.5 to 4	V
Operating Temperature Range	T_{op}	–40 to +85	°C

■Electrical Characteristics

(T_a=25°C)

Parameter	Symbol		Ratings min.	Ratings typ.	Ratings max.	Unit
Reference Voltage	V_{ref}		0.494	0.500	0.506	V
		Conditions	V_{IN}=5V, V_{EN}=5V			
Circuit Current (V_{IN} Pin)	I_{op}			5		mA
		Conditions	V_{IN}=5V, V_{EN}=H			
Standby Current (V_{IN} Pin)	I_{std}			400	600	µA
		Conditions	V_{IN}=5V, V_{EN}=L			
On Time	T_{on}			2		µS
		Conditions	V_{IN}=5V, V_O=2.5V			
High Side Drive Block ON Resistance (Pulled Up)	R_{on}HH			3.5		Ω
		Conditions	V_{IN}=5V, I_D=0.1A			
High Side Drive Block ON Resistance (Pulled Down)	R_{on}HL			3.5		Ω
		Conditions	V_{IN}=5V, I_D=0.1A			
Low Side Drive Block ON Resistance (Pulled Up)	R_{on}LH			3.5		Ω
		Conditions	V_{IN}=5V, I_D=0.1A			
Low Side Drive Block ON Resistance (Pulled Down)	R_{on}LL			3.5		Ω
		Conditions	V_{IN}=5V, I_D=0.1A			
Overcurrent Detection Voltage	V_{lim}		40	50	60	mV
		Conditions	V_{IN}=5V			
EN/SS Pin Current	I_{ss}		7	10	13	µA
		Conditions	V_{IN}=5V			
EN/SS Low Level Voltage	V_{celo}		0		0.8	V
		Conditions	V_{IN}=5V			
EN/SS Threshold Voltage	$V_{th(SS\ Start)}$		0.8	0.9	1.0	V
		Conditions	V_{IN}=5V			
	$V_{th(ON)}$				2.4	V
		Conditions	V_{IN}=5V			
Undervoltage Lock Out (V_{IN})	V_{uvloh}				2.9	V
	V_{uvlol}		2.4			V

■External Dimensions (SOP8)

(Unit : mm)

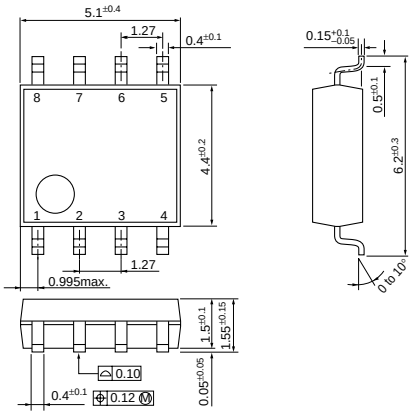

Pin Assignment

① V_{IN}
② EN/SS
③ V_O
④ V_{SENS}
⑤ GND
⑥ DRVL
⑦ DRVH
⑧ I_{SEN}

Plastic Mold Package Type

Flammability : UL 94V-0

Product Mass : Approx. 0.1 g

■Block Diagram

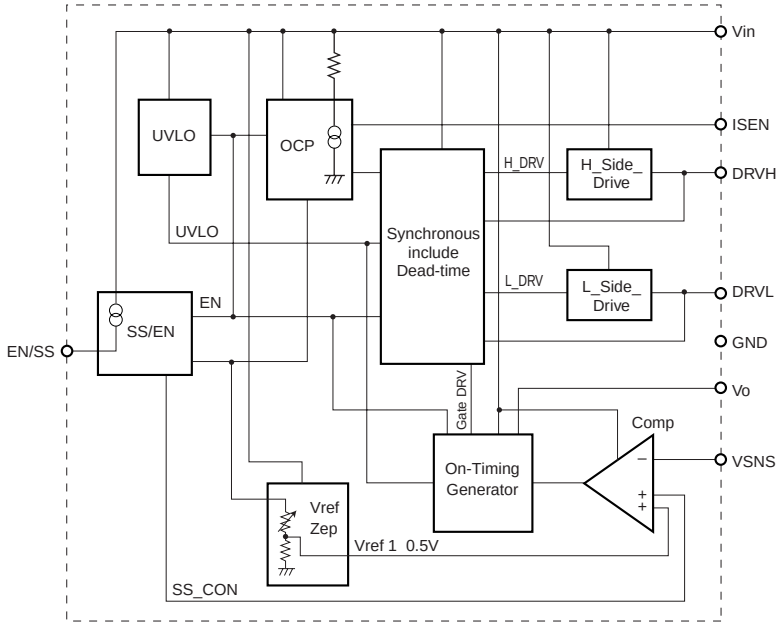

■Typical Connection Diagram

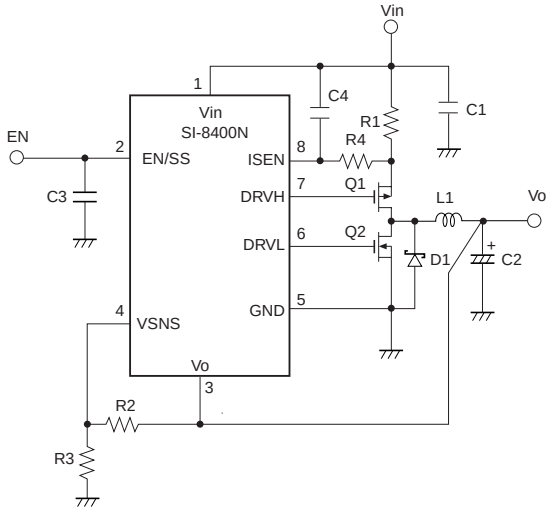

C_1 : 10µF
C_2 : 330µF
C_3 : 0.022µF
C_4 : 0.068µF
L_1 : 10µH
D_1 : SJPB-L4 (Sanken)

SI-8511NVS Surface-Mount, Synchronous Rectifier Step-down Switching Mode Regulator Control ICs

■Features

- Surface-mount package (TSSOP24)
- High efficiency due to synchronous rectification: 92% (at V_{IN} = 5V, I_O = 1A, V_O = 2.5V)
- Capable of downsize a choke-coil due to IC's high switching frequency (400kHz typ, On Time Control). (Compared with conventional Sanken devices)
- Low reference voltage (V_{ref}) of 1.1V. The output voltage is variable from 1.1V to 6V.
- High-speed response to a load
- Compatible with low ESR capacitors
- Soft start and output ON/OFF available
- Built-in overcurrent and output-overvoltage protection circuits
- PWRGD function to indicate the output voltage status
- High precision reference voltage: 1.1V ± 1.2%

■Absolute Maximum Ratings

(T_a=25°C)

Parameter	Symbol	Ratings	Unit
Control-System DC Input Voltage	V_{CC}	7	V
DC Input Voltage	V_{IN}	25	V
Boost Block Input Voltage	V_H	30	V
EN Terminal Input Voltage	V_{EN}	V_{CC}	V
PWRGD Terminal Applied Voltage	V_{PWRGD}	7	V
Junction Temperature	T_j	+150	°C
Storage Temperature	T_{stg}	–40 to +150	°C

■Applications

- Power supplies for notebook PCs and mobile devices
- Onboard local power supplies
- OA equipment
- For stabilization of the secondary-side output voltage of switching power supplies

■Recommended Operating Conditions

Parameter	Symbol	Ratings	Unit
Control System Input Voltage Range	V_{CC}	4.5 to 5.5	V
Input Voltage Range	V_{IN}	3 to 18	V
Output Voltage Range	V_O	1.1 to 6	V
Operating Temperature Range	T_{op}	–20 to +85	°C

■Electrical Characteristics

(T_a=25°C unless otherwise specified)

Parameter		Symbol	Ratings			Unit	Conditions
			min.	typ.	max.		
Dynamic Characteristics	Output Voltage	V_O	–1.2%	1.1	+1.2%	V	V_{IN}=5V, V_{CC}=5V, VSNS connected to VO, I_O=0A
	Temperature Coefficient of Output Voltage	$\Delta V_O/\Delta T$		±0.03		mV/°C	V_{IN}=5V, V_{CC}=5V, VSNS connected to VO, I_O=0A, T_a=0 to 85°C
Circuit Current	Circuit Current (V_{CC} Terminal)	I_{op}			6	mA	V_{CC}=5V, EN=H, FADJ:open
	Circuit Current (V_{IN} Terminal)	I_{op}			1	mA	V_{IN}=5V, EN=H
	Standby Current 1 (V_{CC} Terminal)	I_{std1}			100	μA	V_{CC}=5V, EN=L
	Standby Current 2 (V_{IN} Terminal)	I_{std2}			50	μA	V_{IN}=5V, EN=L
Undervoltage Lockout	UVLO Operating Voltage 1 (V_{CC} Terminal)	V_{uvlo1}	3.7		4.45	V	V_{IN}=5V
	UVLO Operating Voltage 2 (V_{IN} Terminal)	V_{uvlo2}	2.5		2.9	V	V_{CC}=5V
On Time Control	On Time	T_{on}		1.27		μS	V_{CC}=5V, V_{IN}=5V, V_O=2.5V
	Minimum Off Time	T_{off}		0.7		μS	V_{CC}=5V
	REF Terminal Voltage	V_{ref}	1.1	1.2	1.3	V	V_{CC}=5V
	REF Terminal Source Current	I_{ref}			100	μA	V_{CC}=5V
High Side Drive	On Resistance (high side)	RonHH		5.5		Ω	VH-VLIN=5V
	On Resistance (low side)	RonHL		5.5		Ω	VH-VLIN=5V
Low Side Drive	On Resistance (high side)	RonLH		5.5		Ω	V_{CC}=5V
	On Resistance (low side)	RonLL		5.5		Ω	V_{CC}=5V
Bootstrap	Bootstrap Voltage	VH-VLIN	4.5	5	5.5	V	
Protection System	Current for Current Limit Detection	I_{lim}	90	100	110	μA	V_{CC}=5V, V_{IN}=5V
	Soft Start Terminal Current	I_{ss}		±20		μA	V_{CC}=5V
	EN Low Level Voltage	V_{celo}	0		0.8	V	V_{CC}=5V
	EN High Level Voltage	V_{cehi}	2.4		V_{CC}	V	V_{CC}=5V
	EN Bias Level Current	ICE			5	μA	V_{CC}=5V, EN=5V
	PWRGD Good Voltage (high side)	V_{sens}		1.32		V	V_{CC}=5V
	PWRGD Good Voltage (low side)	V_{sens}		0.88		V	V_{CC}=5V
	PWRGD Low Output Voltage	V_{pwrgd}			0.4	V	V_{CC}=5V, Ipwrgd=120μA
	PWRGD Terminal Current	I_{pwrgd}			120	μA	V_{CC}=5V, Vpwrgd=0.4V
	PWRGD Leakage Current	I_{pwrgd}			5	μA	Vpwrgd=5V

■External Dimensions (TSSOP24)

(Unit : mm)

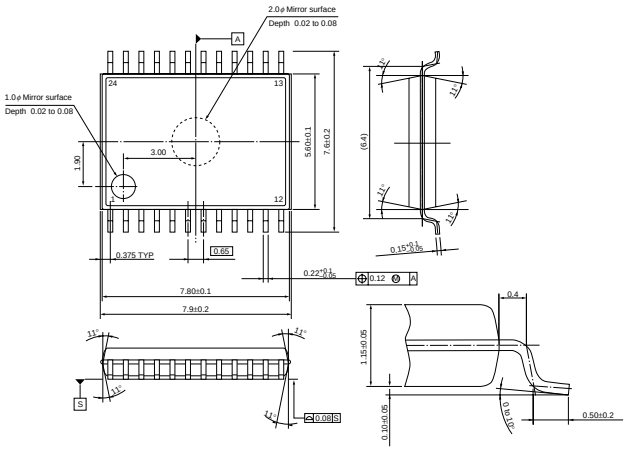

Plastic Mold Package Type
Flammability: UL94V-0
Product Mass: Approx. 1.36g

■Block Diagram (Pin Assignment)

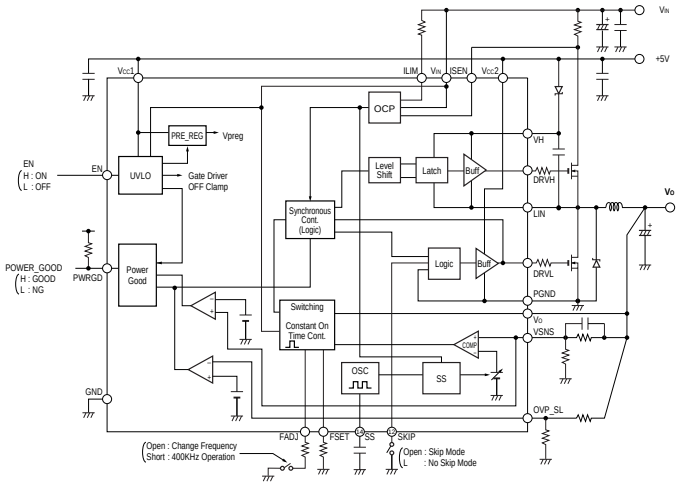

■Typical Connection Diagram

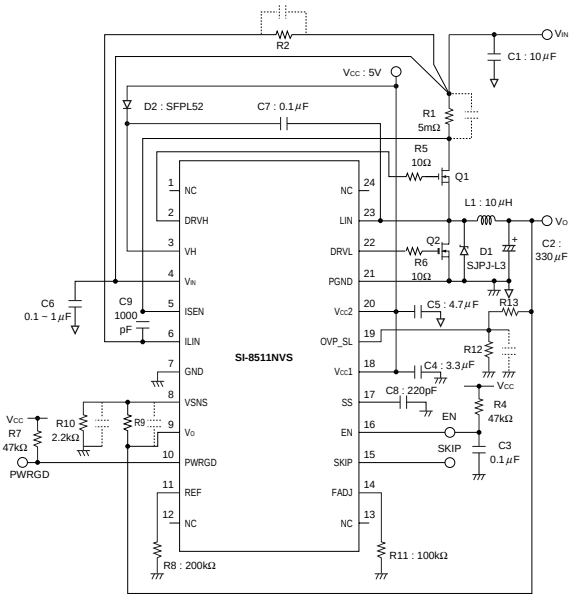

MOS FET Q_1, Q_2

- Be sure to use logic type MOS FET as Q_1 and Q_2.
  If you use a normal power MOS FET type, the ON resistance may not drop to a satisfactory level due to a shortage of V_{GS}. This may deteriorate the efficiency and cause overheating.

Diode D_1

- Be sure to use a Schottky-barrier diode for D_1.
  If other diodes like fast recovery diodes are used, IC may be destroyed because of the reverse voltage generated by the recovery voltage or ON voltage.

Choke coil L_1

- If the winding resistance of the choke coil is too high, the efficiency may drop below the rated value.
- Take care concerning heat radiation from the choke coil caused by magnetic saturation due to overload or short-circuit load.

Capacitor C_1, C_2

- As large ripple currents flow through C_1 and C_2, use high-frequency and low-impedance capacitors suitable for switching mode power supplies. Especially when the impedance of C_2 is high, the switching waveform may become abnormal at low temperatures. For C_2, do not use a capacitor with an extremely low equivalent series resistance (ESR) such as a ceramic capacitor, which may cause an abnormal oscillation.

* To create the optimum operating conditions, place the components as close as possible to each other.

SI-8405NH Surface-Mount, Synchronous Rectifier Step-down Switching Mode Regulator Control ICs

■Features

- Input voltage (Vin): 3.0 to 5.5 V
- Synchronous rectification
- Output voltage precision ±1.2%
- Oscillation Frequency: 750 kHz
- Overcurrent protection (Overcurrent value can be set by the external resistor.)
- Output can be disabled
- Undervoltage Lock Out
- Soft start function
- High-speed load response

■Applications

- Power supply for LCD modules
- Power supply for notebook PC
- Onboard local power supplies
- Power supply for LBP/PPC

■Absolute Maximum Ratings

Parameter	Symbol	Ratings	Unit
Input Voltage (V_{IN} pin)	V_{IN}	6	V
EN/SS Pin Input Voltage	V_{EN}	–0.3 to V_{IN}	V
Junction Temperature	T_j	+125	°C
Storage Temperature	T_{stg}	–40 to +150	°C

■Recommended Operating Conditions

Parameter	Symbol	Ratings	Unit
Input Voltage Range	V_{IN}	3 to 5.5	V
Output Voltage Range	V_o	0.5 to 4	V
Operating Temperature Range	T_{op}	–30 to +85	°C

■Electrical Characteristics

(T_a=25°C)

Parameter	Symbol		Ratings min.	Ratings typ.	Ratings max.	Unit
Reference Voltage	V_{ref}		0.494	0.500	0.506	V
		Conditions	V_{IN}=5V, V_{EN}=5V			
Circuit Current (V_{IN} Pin)	I_{op}			5		mA
		Conditions	V_{IN}=5V, V_{EN}=H			
Standby Current (V_{IN} Pin)	I_{std}			400	600	µA
		Conditions	V_{IN}=5V, V_{EN}=L			
On Time	T_{on}			0.65		µS
		Conditions	V_{IN}=5V, V_o=2.5V			
High Side Drive Block ON Resistance (Pulled Up)	$R_{on}HH$			3.5		Ω
		Conditions	V_{IN}=5V, I_D=0.1A			
High Side Drive Block ON Resistance (Pulled Down)	$R_{on}HL$			3.5		Ω
		Conditions	V_{IN}=5V, I_D=0.1A			
Low Side Drive Block ON Resistance (Pulled Up)	$R_{on}LH$			3.5		Ω
		Conditions	V_{IN}=5V, I_D=0.1A			
Low Side Drive Block ON Resistance (Pulled Down)	$R_{on}LL$			3.5		Ω
		Conditions	V_{IN}=5V, I_D=0.1A			
Overcurrent detection voltage	V_{lim}		40	50	60	mV
		Conditions	V_{IN}=5V			
EN/SS Pin Current	I_{ss}		7	10	13	µA
		Conditions	V_{IN}=5V			
EN/SS Low Level Voltage	V_{celo}		0		0.8	V
		Conditions	V_{IN}=5V			
EN/SS Threshold Voltage	$V_{th\ (SS\ Start)}$		0.8	0.9	1.0	V
		Conditions	V_{IN}=5V			
	$V_{th\ (ON)}$				2.4	V
		Conditions	V_{IN}=5V			
Undervoltage Lock Out (V_{IN})	V_{uvloh}				2.9	V
	V_{uvlol}		2.4			V

■External Dimensions (SOP8)

(Unit : mm)

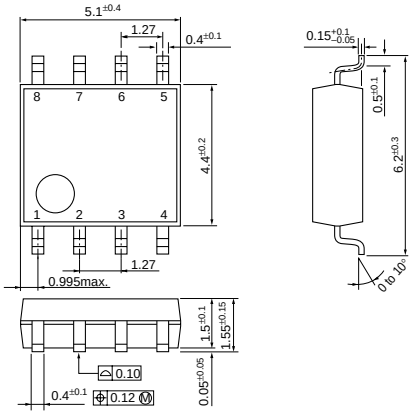

Pin Assignment

① V_{IN}
② EN/SS
③ V_O
④ V_{SENS}
⑤ GND
⑥ DRVL
⑦ DRVH
⑧ I_{SEN}

Plastic Mold Package Type
Flammability : UL 94V-0
Product Mass : Approx. 0.1 g

■Block Diagram

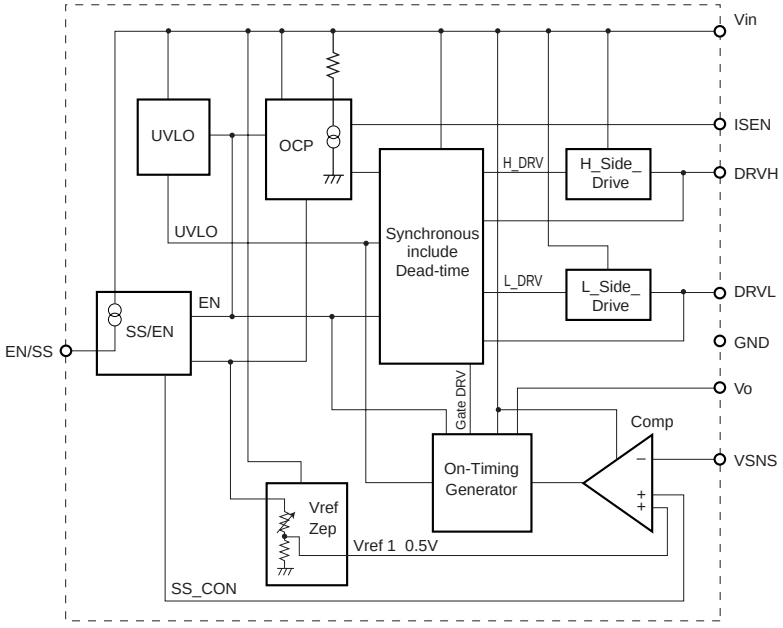

■Typical Connection Diagram

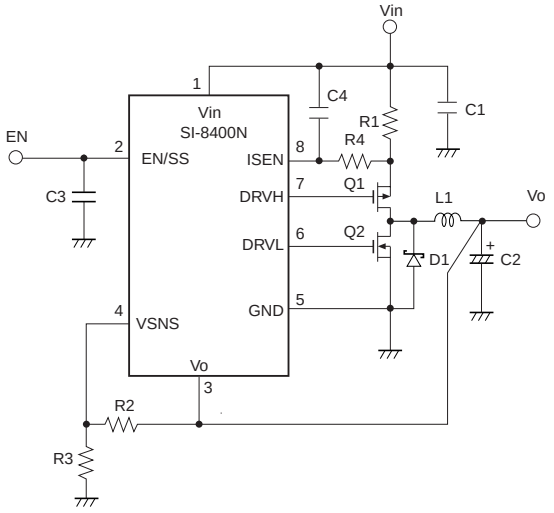

C_1 : 10µF
C_2 : 330µF
C_3 : 0.022µF
C_4 : 0.1µF
L_1 : 2.7µH
D_1 : SJPB-L4 (Sanken)

SI-8205NHD Surface-Mount, Current Mode Control, Synchronous Rectifier Step-down Switching Mode Regulator ICs

■Features

- Compact surface-mount (HSOP8) package
- Wide input voltage range (V_{IN}): Vo + 3 to 43 V
- Synchronous rectifier mode
- Output current: 3 A
- Reference voltage and accuracy of 0.5 V ±1%
- Oscillation frequency: 200 kHz to 1 MHz
- Output can be disabled
- Undervoltage Lock Out
- Soft start function

■Applications

- Power supply for LCD module
- Power supply for notebook PC
- Onboard local power supplies
- Power supply for LBP/PPC

■Absolute Maximum Ratings

Parameter	Symbol	Ratings	Unit	Conditions
Input Voltage (VIN Pin)	V_{IN}	46	V	
Power Dissipation*1	P_D	1.35	W	When mounted on a 30 x 30 mm glass-epoxy board (with a 25 x 25 mm copper area)
Junction Temperature	T_j	–40 to +150	°C	
Storage Temperature	T_{stg}	–40 to +150	°C	
Thermal Resistance (Junction to Lead <1 pin>)	$\theta_{j\text{-}c}$	40	°C/W	
Thermal Resistance (Junction to Ambient Air)	$\theta_{j\text{-}a}$	74	°C/W	When mounted on a 30 x 30 mm glass-epoxy board (with a 25 x 25 mm copper area)

■Recommended Operating Conditions

Parameter	Symbol	Ratings	Unit
Input Voltage Range	V_{IN}	Vo+3 to 43	V
Output Current Range	I_o	0 to 3.0	A
Output Voltage Range	V_o	0.5 to 24	V
Operating Junction Temperature Range	T_{jop}	–40 to +125	°C
Operating Temperature Range	T_{op}	–40 to +85	°C

■Electrical Characteristics

(T_a = 25°C and f_o = 500kHz unless otherwise specified)

Parameter		Symbol	Ratings min.	Ratings typ.	Ratings max.	Unit	Conditions
Reference Voltage		V_{ref}	0.495	0.500	0.505	V	V_{IN}=12V, Io=1.0A
Temperature Coefficient of Reference Voltage		$\Delta V_{REF}/\Delta T$		±0.05		mV/°C	V_{IN}=12V, Io=1.0A, Ta=–40 to +85°C
Efficiency		η		90		%	V_{IN}=12V, Vo=5V, Io=1.0A
Oscillation Frequency 1		fo1		200		kHz	V_{IN}=12V, Vo=5V, Io=1A, Rfset=375kΩ
Oscillation Frequency 2		fo2		1		MHz	V_{IN}=12V, Vo=5V, Io=1A, Rfset=75kΩ
Line Regulation		ΔV_{OLINE}		50		mV	V_{IN}=8 to 43V, Vo to 5V, Io=1A
Load Regulation		ΔV_{OLOAD}		50		mV	V_{IN}=12V, Vo=5V, Io=0.1 to 3.0A
Overcurrent Protection Starting Current		I_s	3.1		6.0	A	V_{IN}=12V, Vo=5V
Quiescent Circuit Current		I_{IN}		8		mA	V_{IN}=12V, Vcomp=0V
		$I_{IN(OFF)}$			40	μA	V_{IN}=12V, V_{EN}/ss=0V
EN/SS Pin	Outflow Current at Low Voltage	$I_{EN/SS}$		5		μA	$V_{EN/SS}$=0V, V_{IN}=12V
	Open Voltage	V_{SSH}	3.0	4.5	6.0	V	V_{IN}=12V
	On Threshold Voltage	$V_{C/EH}$	0.6	1.3	2.0	V	V_{IN}=12V
OVP Start Voltage		V_{ovp}	0.57	0.60	0.63	V	
Thermal Protection Start Temperature		T_j	151	160		°C	
Error Amplifier Voltage Gain		AEA		800		V/V	
Error Amplifier Transformer Conductance		GEA		800		μA/V	
Current Sense Amplifier Impedance		GCS		3.33		A/V	
Maximum ON Duty		DMAX		90		%	V_{IN}=12V
Minimum ON Time		DMIN		150		nsec	V_{IN}=12V

■External Dimensions (HSOP8)

(Unit : mm)

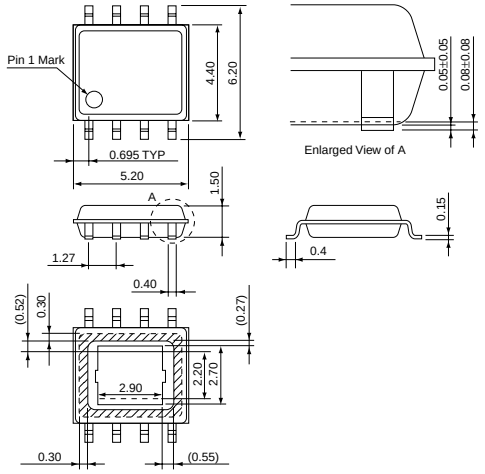

Pin Assignment
① GND
② EN/SS
③ V_{IN}
④ FSET
⑤ COMP
⑥ FB
⑦ BS
⑧ SW

Plastic Mold Package Type
Flammability : UL 94V-0
Product Mass : Approx. 0.1 g

■Block Diagram

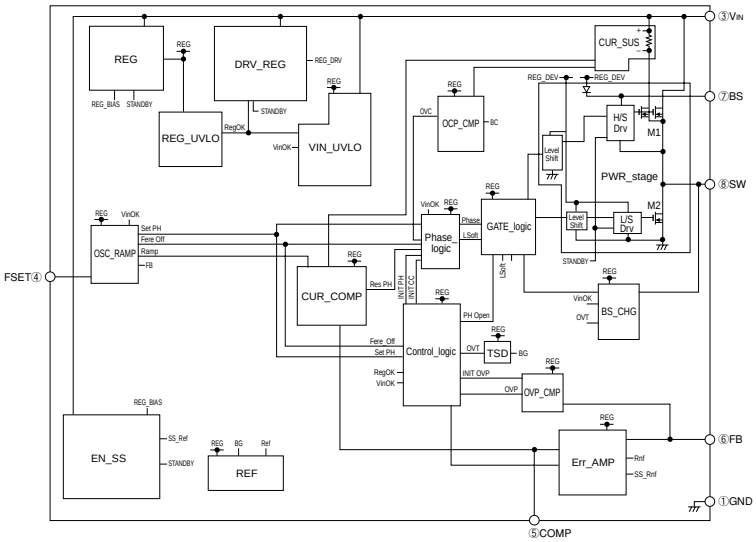

■Typical Connection Diagram

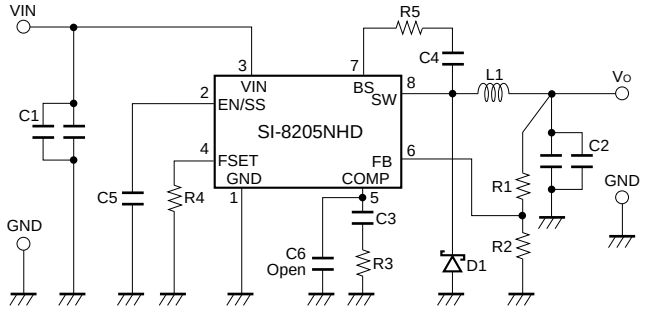

C1:10μF/50V×2
(murata:GRM55DB31H106KA87)
C2:22μF/16V×2
(murata:GRM32ER71A226KE20)
C3:270pF
(murata:GRM18 type)
C4:10μF
(murata: GRM18 type)
C5:1μF
(murata: GRM18 type)
L1:10μH
D1: SJPB-L6 (Sanken)
R1:9kΩ(When Vo=5V)
R2:1kΩ
R3:51kΩ
R4:150kΩ
R5:20Ω to 47Ω

STA810M Series Separate Excitation Switching Mode Regulator ICs with Flywheel Diode

■Features

- Output current: 1.5A
- High efficiency: TYP83% (STA811M)
- Built-in flywheel diode (schottky-barrier diode)
- Requires only 3 discrete components: output coil, input and output capacitors
- Phase correction and output voltage adjustment performed internally
- Built-in reference oscillator (125kHz)
- Built-in foldback-overcurrent and thermal protection circuits
- Built-in ON/OFF circuit (soft start available)

■Applications

- Power supplies for telecommunication equipment
- Onboard local power supplies
- OA equipment
- For stabilization of the secondary-side output voltage of switching power supplies

■Lineup

Part Number	Output Voltage (V)
STA811M	6.5

■Absolute Maximum Ratings*1

Parameter	Symbol	Ratings	Unit
DC Input Voltage	V_{IN}	43	V
Output Current	I_O	1.5	A
Power Dissipation*2	P_{D1}	18.2 (With infinite heatsink)	W
	P_{D2}	2.7 (Without heatsink, stand-alone operation)	W
Junction Temperature	T_j	+125	°C
Storage Temperature	T_{stg}	–40 to +125	°C
Thermal Resistance (junction to case)	$\theta_{j\text{-}c}$	5.5	°C/W
Thermal Resistance (junction to ambient air)	$\theta_{j\text{-}a}$	37	°C/W

*1: Absolute maximum ratings show the destructive limit. No parameter should exceed the ratings in transient or normal operations.
*2: Limited by thermal protection.

■Recommended Operating Conditions*1

Parameter	Symbol	Ratings STA811M min.	Ratings STA811M max.	Unit	Conditions
DC Input Voltage Range	V_{IN1}	8.5	9.5	V	I_O=0 to 1A
	V_{IN2}	9.5	40	V	I_O=0 to 1.5A
Output Current Range*2	I_O	0	1.5	A	$V_{IN} \geq 9.5V$
Operating Junction Temperature Range	T_{jop}	–30	+125	°C	
Operating Temperature Range*2	T_{op}	–30	+80	°C	

*1: Recommended operating conditions show operating conditions required for normal circuit function described in the electrical characteristics. These conditions must be followed in actual use.
*2: Limited by T_a-P_D characteristics.

■Electrical Characteristics

(T_a=25°C)

Parameter		Symbol	Ratings STA811M min.	Ratings STA811M typ.	Ratings STA811M max.	Unit
Output Voltage		V_O	6.37	6.5	6.63	V
		Conditions	V_{IN}=28V, I_O=1A			
Efficiency*1		η		83		%
		Conditions	V_{IN}=28V, I_O=1A			
Oscillation Frequency		f_O		125		kHz
		Conditions	V_{IN}=28V, I_O=1A			
Line Regulation		V_{OLINE}		40	100	mV
		Conditions	V_{IN}=10 to 30V, I_O=1A			
Load Regulation		V_{OLOAD}		10	40	mV
		Conditions	V_{IN}=28V, I_O=0.2 to 1A			
Temperature Coefficient of Output Voltage		$\Delta V_O/\Delta T$		±0.5		mV/°C
Overcurrent Protection Starting Current		I_S	1.6			A
		Conditions	V_{IN}=28V			
ON/OFF Pin*2	Low Level Voltage	V_{SSL}			0.5	V
	Outflow Current at Low Voltage	I_{SSL}			100	μA
		Conditions	V_{SSL}=0V			
Quiescent Circuit Current 1		I_q		7		mA
		Conditions	V_{IN}=28V, I_O=0A			
Quiescent Circuit Current 2		$I_{q(OFF)}$			200	μA
		Conditions	V_{IN}=28V, $V_{ON/OFF}$=0.3A			

*1: Efficiency is calculated from the following formula.

$$\eta\ (\%) = \frac{V_O \cdot I_O}{V_{IN} \cdot I_{IN}} \times 100$$

*2: Pin 7 is the ON/OFF pin. Soft start at power on can be performed by connecting a capacitor to this pin. The output can also be turned ON/OFF with this pin. The output is stopped by setting the voltage of this pin to V_{SSL} or lower. ON/OFF-pin voltage can be changed with an open-collector drive circuit of a transistor. When using both the soft-start and ON/OFF functions together, the discharge current from C_3 flows into the ON/OFF control transistor. Therefore, limit the current securely to protect the transistor if C_3 capacitance is large. The ON/OFF pin is pulled up to the power supply in the IC, so applying the external voltage is prohibited. If this pin is not used, leave it open.

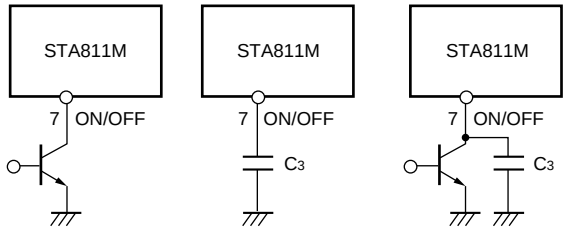

V_O. ON/OFF | Soft start | Soft start +V_O. ON/OFF

■External Dimensions (SIP8 [STA 8Pin])

(Unit : mm)

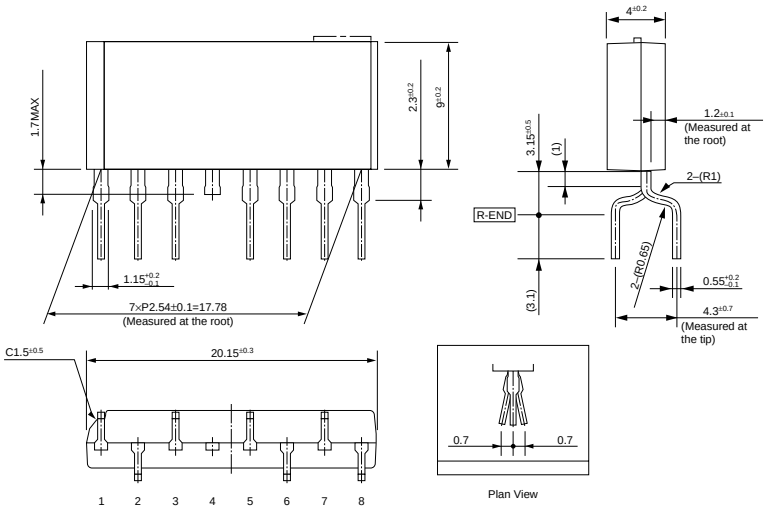

Pin Assignment

① SWOUT
② GND
③ VIN
④ N.C
⑤ GND
⑥ VOS
⑦ ON/OFF
⑧ GND

Plastic Mold Package Type
Flammability: UL 94V-0
Product Mass: Approx. 2.0 g

■Block Diagram

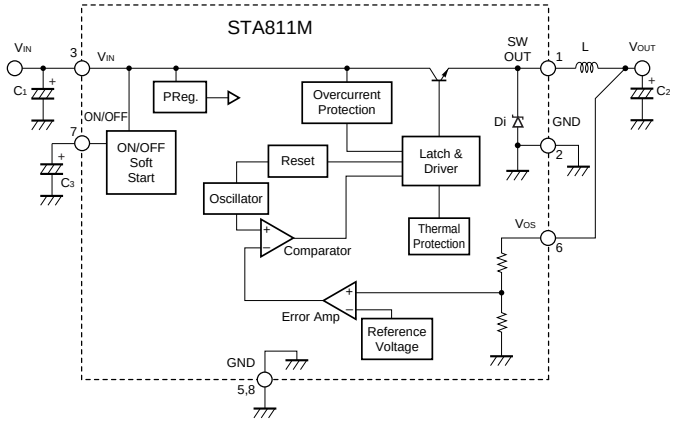

■Typical Connection Diagram

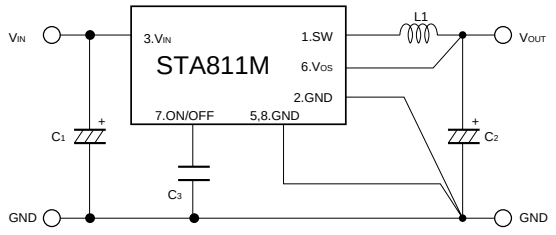

C_1: 220 μF/50V
C_2: 470 μF/25V
C_3: 0.47 μF/10V (Only when using soft start function)
L_1: 100 μH

■Thermal Derating

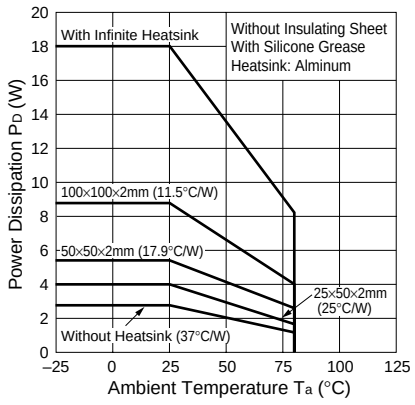

$$P_D = V_O \cdot I_O \left(\frac{100}{\eta\chi} - 1 \right)$$

V_O : Output voltage
V_{IN} : Input voltage
I_O : Otuput current
$\eta\chi$: Efficiency (%)

STA820M Series Separate Excitation Switching Mode Regulator ICs with Flywheel Diode

■Features

- Output current: 3A
- High efficiency: TYP 83% (STA821M)
- Built-in flywheel diode (Schottky-barrier diode)
- Requires only 3 discrete components: output coil, input and output capacitors
- Phase correction and output voltage adjustment performed internally
- Built-in reference oscillator (110kHz)
- Built-in foldback-overcurrent and thermal protection circuits
- Built-in ON/OFF circuit (soft start available)

■Applications

- Power supplies for telecommunication equipment
- On-board local power supplies
- OA equipment
- For stabilization of the secondary-side output voltage of switching power supplies

■Lineup

Part Number	Output Voltage (V)
STA821M	5

■Absolute Maximum Ratings*1

Parameter	Symbol	Ratings	Unit
DC Input Voltage	V_{IN}	31	V
Output Current	I_O	3	A
Power Dissipation*2	P_{D1}	18.2 (With infinite heatsink)	W
	P_{D2}	2.7 (Without heatsink, stand-alone operation)	W
Junction Temperature	T_j	+125	°C
Storage Temperature	T_{stg}	–40 to +125	°C
Thermal Resistance (Junction to Case)	$\theta_{j\text{-}c}$	5.5	°C/W
Thermal Resistance (Junction to Ambient Air)	$\theta_{j\text{-}a}$	37	°C/W

*1: The absolute maximum ratings show the destructive limit. No parameter should exceed the ratings in transient or normal operations.
*2: Limited by thermal protection.

■Recommended Operating Conditions*1

Parameter	Symbol	Ratings STA821M min.	Ratings STA821M max.	Unit
DC Input Voltage Range	V_{IN}	7	30	V
Output Current Range*2	I_O	0	3	A
Operating Junction Temperature Range	T_{jop}	–30	+125	°C
Ambient Temperature Range*2	T_{op}	–30	+80	°C

*1: The recommended operating conditions show the operating conditions required for the normal circuit function described in the electrical characteristics. These conditions must be followed in actual use.
*2: Limited by T_a-P_D characteristics.

■Electrical Characteristics

(T_a=25°C)

Parameter		Symbol	Ratings STA821M min.	Ratings STA821M typ.	Ratings STA821M max.	Unit
Output Voltage		V_O	4.8	5.0	5.2	V
		Conditions	V_{IN}=20V, I_O=1A			
Efficiency*1		η		83		%
		Conditions	V_{IN}=20V, I_O=1A			
Oscillation Frequency		f_O		110		kHz
		Conditions	V_{IN}=20V, I_O=1A			
Line Regulation		V_{OLINE}		40	100	mV
		Conditions	V_{IN}=10 to 30V, I_O=1A			
Load Regulation		V_{OLOAD}		10	40	mV
		Conditions	V_{IN}=20V, I_O=0.5 to 1.5A			
Temperature Coefficient of Output Voltage		$\Delta V_O/\Delta T$		±0.5		mV/°C
Overcurrent Protection Starting Current		I_S	3.1			A
		Conditions	V_{IN}=20V			
ON/OFF Pin*2	Low Level Voltage	V_{SSL}		0.2		V
	Outflow Current at Low Voltage	I_{SSL}	15	25	35	μA
		Conditions	V_{SSL}=0.2V			
Quiescent Circuit Current		I_q		4		mA
		Conditions	V_{IN}=20V, I_O=0A			

*1: Efficiency is calculated from the following formula.

$$\eta(\%) = \frac{V_O \cdot I_O}{V_{IN} \cdot I_{IN}} \times 100$$

*2: Pin 7 is the ON/OFF pin. Soft start at power on can be performed by connecting a capacitor to this pin. The output can also be turned ON/OFF with this pin. The output is stopped by setting the voltage of this pin to V_{SSL} or lower. ON/OFF-pin voltage can be changed with an open-collector drive circuit of a transistor. When using both the soft-start and ON/OFF functions together, the discharge current from C_3 flows into the ON/OFF control transistor. Therefore, limit the current securely to protect the transistor if C_3 capacitance is large. The ON/OFF pin is pulled up to the power supply in the IC, so applying the external voltage is prohibited. If this pin is not used, leave it open.

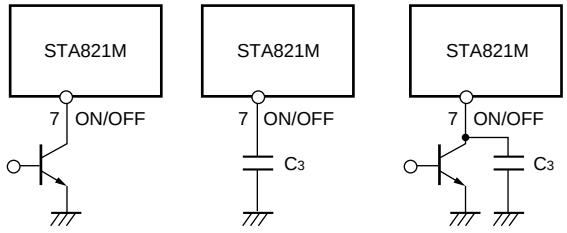

V_O. ON/OFF | Soft start | Soft start +V_O. ON/OFF

■External Dimensions (SIP8 [STA 8Pin])

(Unit : mm)

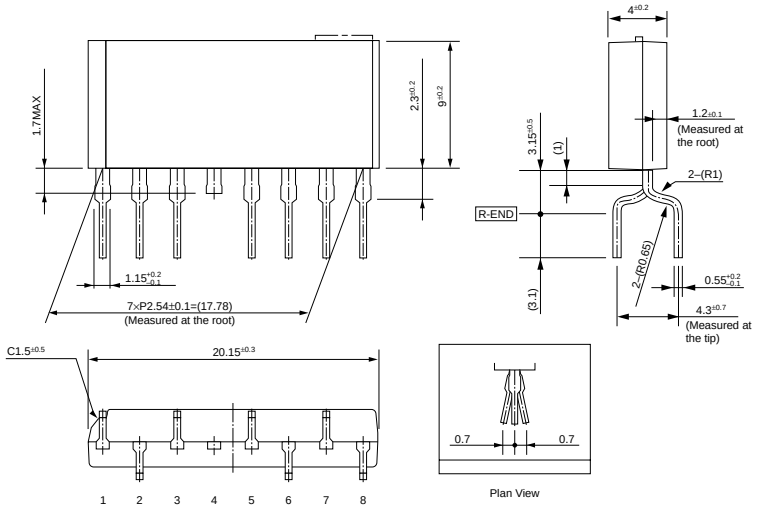

Pin Assignment
① SWOUT
② GND
③ VIN
④ N.C
⑤ GND
⑥ VOS
⑦ ON/OFF
⑧ GND

Plastic Mold Package Type
Flammability: UL 94V-0
Product Mass: Approx. 2.0 g

■Block Diagram

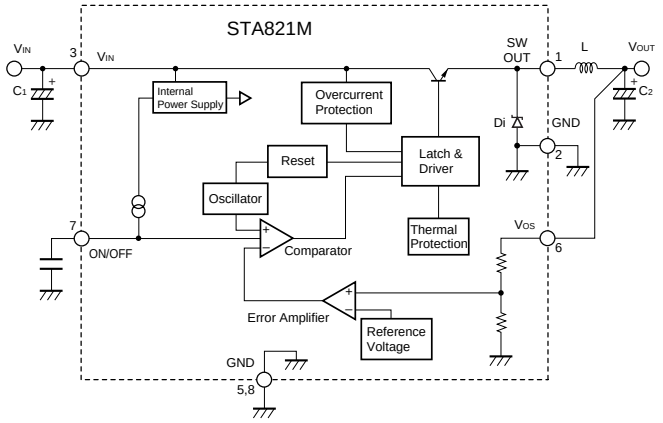

■Typical Connection Diagram

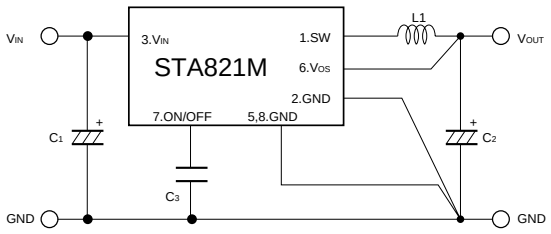

C1 : 1000μF/50V
C2 : 1000μF/25V
C3 : 0.47μF/10V(only when the soft start function is used)
L1 : 100μH

■Ta-PD Characteristics

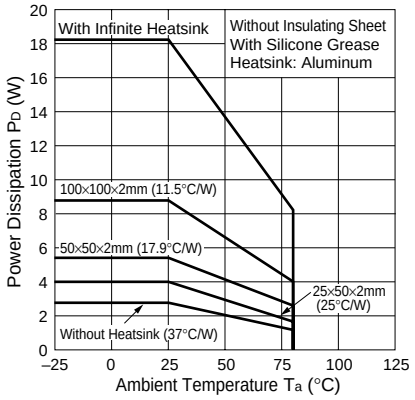

$$P_D = V_O \cdot I_O \left(\frac{100}{\eta\chi} - 1 \right)$$

VO : Output voltage
VIN : Input voltage
IO : Output current
ηχ : Efficiency (%)

SI-8400L/8500L Series Separate Excitation Switching Mode Regulator ICs with Coil

■Features

- Switching ICs/Coil combined type
- Requires only 2 discrete components
- Low switching noise
- No heatsink required
- Built-in overcurrent and thermal protection circuits
- Built-in soft start circuit (Output ON/OFF available)...SI-8500L Series

■Applications

- Telephone power supplies
- Onboard local power supplies

■Lineup

Part Number	SI-8401L	SI-8501L
V_O(V)	5.0	5.0
I_O(A)	0.5	1.0

■Absolute Maximum Ratings

Parameter	Symbol	Ratings		Unit
		SI-8400L	SI-8500L	
DC Input Voltage	V_{IN}	35		V
Power Dissipation	P_D	1.25	3	W
Junction Temperature	T_j	+100		°C
Storage Temperature	T_{stg}	–25 to +85		°C

■Recommended Operating Conditions

Parameter	Symbol	Ratings	Unit
		SI-8401L	
DC Input Voltage Range	V_{IN}	7 to 33	V
Output Current Range	I_O	0 to 0.5	A
Operating Temperature Range	T_{op}	–20 to +85	°C

Parameter	Symbol	Ratings	Unit
		SI-8501L	
DC Input Voltage Range	V_{IN}	7 to 33	V
Output Current Range	I_O	0 to 1.0	A
Operating Temperature Range	T_{op}	–20 to +85	°C

■Electrical Characteristics

(T_a=25°C)

Parameter	Symbol	Ratings SI-8401L min.	typ.	max.	Unit
Output Voltage	V_O	4.80	5.00	5.20	V
	Conditions	V_{IN}=20V, I_O=0.3A			
Efficiency	η		80		%
	Conditions	V_{IN}=20V, I_O=0.3A			
Oscillation Frequency	f		60		kHz
	Conditions	V_{IN}=20V, I_O=0.3A			
Line Regulation	ΔV_{OLINE}		80	100	mV
	Conditions	V_{IN}=10 to 30V, I_O=0.3A			
Load Regulation	ΔV_{OLOAD}		30	40	mV
	Conditions	V_{IN}=20V, I_O=0.1 to 0.4A			
Temperature Coefficient of Output Voltage	$\Delta V_O/\Delta T_a$		±0.5		mV/°C
Switching Ripple Voltage (C_2=470μF)	ΔV_r		20	40	mV_{p-p}
	Conditions	V_{IN}=20V, I_O=0.3A			
Overcurrent Protection Starting Current	I_{S1}	0.55			A
	Conditions	V_{IN}=10V			

(T_a=25°C)

Parameter	Symbol	Ratings SI-8501L min.	typ.	max.	Unit
Output Voltage	V_O	4.80	5.00	5.20	V
	Conditions	V_{IN}=20V, I_O=0.5A			
Efficiency	η		83		%
	Conditions	V_{IN}=20V, I_O=0.5A			
Oscillation Frequency	f		60		kHz
	Conditions	V_{IN}=20V, I_O=0.5A			
Line Regulation	ΔV_{OLINE}		70	130	mV
	Conditions	V_{IN}=10 to 30V, I_O=0.5A			
Load Regulation	ΔV_{OLOAD}		30	55	mV
	Conditions	V_{IN}=20V, I_O=0.2 to 0.8A			
Temperature Coefficient of Output Voltage	$\Delta V_O/\Delta T_a$		±0.5		mV/°C
Switching Ripple Voltage (C_2=470μF)	ΔV_r		45		mV_{p-p}
	Conditions	V_{IN}=20V, I_O=0.5A			
Overcurrent Protection Starting Current	I_{S1}	1.1			A
	Conditions	V_{IN}=18V			

■External Dimensions (Non-package type [EI-12.5 core/EI-19 core])

(Unit : mm)

SI-8400L

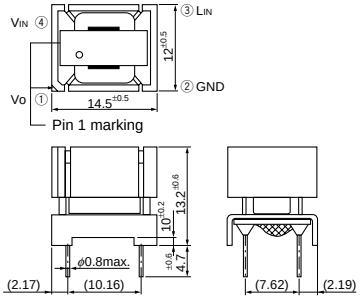

Not encapsulated in a plastic package
Product Mass: Approx. 5.1g

SI-8500L

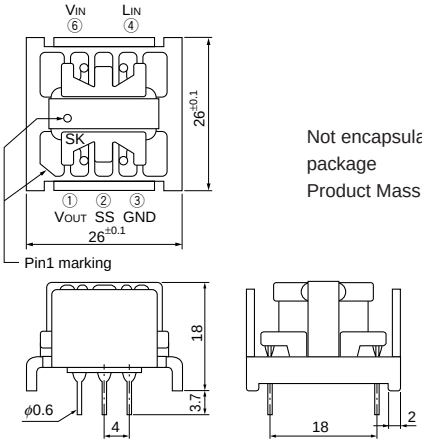

Not encapsulated in a plastic package
Product Mass: Approx. 14.5g

■Block Diagram

SI-8400L

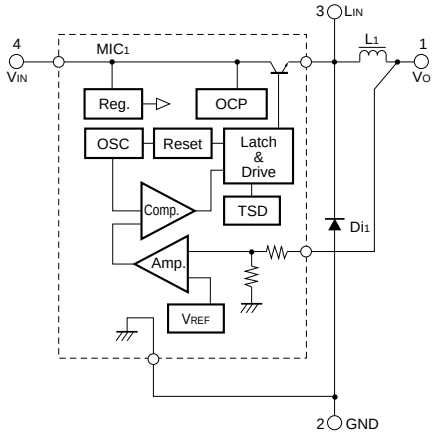

SI-8500L

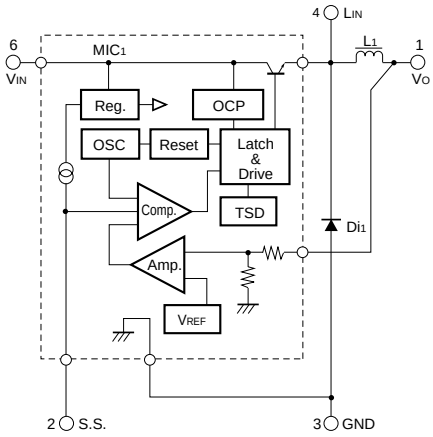

■Typical Connection Diagram

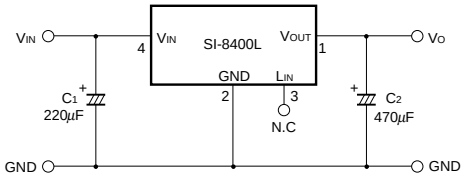

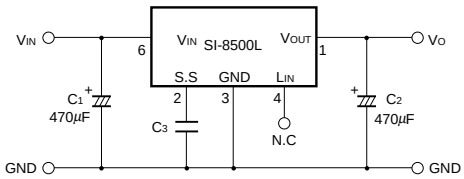

C_3 is necessary only for using soft start function.

■T_a-P_D Characteristics

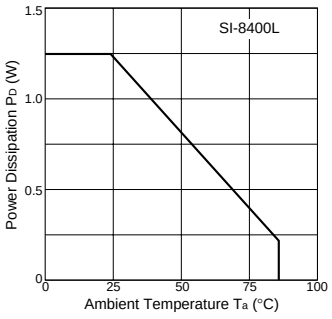

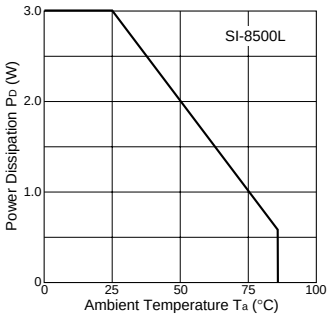

$$P_D = V_O \cdot I_O \left(\frac{100}{\eta\chi} - 1 \right)$$

V_O : Output voltage
I_O : Output current
$\eta\chi$: Efficiency (%)

The efficiency depends on the input voltage and the output current. Therefore, obtain the value from the efficiency graphs and substitute the percentage in the formula above.

Application Note

■ Heat Dissipation and Reliability

The reliability of an IC is highly dependent on its operating temperature. Please be sure to apply silicone grease to the IC and to mount it to the heatsink with a proper mounting torque.
Heatsink design should pay particular attention to ensuring sufficient heat dissipation capacity.
In addition, please take into account the air convection in operation.
The reliability of discrete components such as capacitors and coils is closely related to temperature. A high operating temperature may reduce the service life. Exceeding the allowable temperature may burn the coils or damage capacitors. It is important to make sure that the temperature of output smoothing coils and input/output capacitors do not exceed their allowable levels during operation. With an adequate derating for the coils, minimize heat emission as far as possible. (For discrete components, refer to the individual user manuals.)

■ Thermal Design

The maximum junction temperature $T_{j(max)}$ given in the Absolute Maximum Ratings is specific to each product type and must be strictly observed. Thus, thermal design must consider the maximum power dissipation $P_{D(max)}$, which varies by the conditions of use, and the maximum ambient temperature $T_{a(max)}$.
To simplify the thermal design, T_a-P_D characteristic graphs are provided herein. Please observe the following steps for heatsink design:

1. Obtain the maximum ambient temperature $T_{a(max)}$.
2. Obtain the maximum power dissipation $P_{D(max)}$.
3. Look for the intersection point on the T_a-P_D characteristic graph and determine the size of the heatsink.

Although the heatsink size is now obtained, in actual applications, 10-to-20% derating factor is generally introduced. Moreover, the heat dissipation capacity of a heatsink highly depends on how it is mounted. Thus, it is recommended to measure the heatsink or case temperature in the actual operating environment.
Please refer to the T_a-P_D characteristic graphs for respective product types.

■ Mounting Torque

STA800M Series (when mounted by using a spring)
0.588 to 0.784 [N•m] (6.0 to 8.0 [kgf•cm]

■ Recommended Silicone Grease

- Shin-Etsu Chemical Co., Ltd.: G746
- Momentive Performance Materials Inc.: YG-6260
- Dow Corning Toray Silicone Co., Ltd.: SC102

Please select proper silicone grease carefully since the oil in some grease products may penetrate the device and result in an extremely short device life.

STA801M 2-Output Separate Excitation Switching Mode Regulator ICs

■Features

- 2 regulators combined in 1 package
- Compact inline package
- Output current (0.5A × 2 outputs)
- Output voltage of Ch2 selectable from 4 levels
- Built-in flywheel diode (Schottky barrier diode)
- Requires only 7 discrete components (2 outputs)
- Internally-adjusted phase corrections and output voltages
- Built-in reference oscillator (125kHz) - Enables to downsize a choke-coil due to IC's high oscillating frequency. (Compared with conventional Sanken devices)
- Built-in overcurrent and thermal protection circuits
- Built-in soft start circuits (Output ON/OFF available)

■Lineup

Part Number	Output Voltage (V)	
	Ch1	Ch2(Select one output)
STA801M	5	9.0 / 11.5 / 12.1 / 15.5

■Absolute Maximum Ratings

Parameter	Symbol	Ratings	Unit
DC Input Voltage	V_{IN}	43	V
Power Dissipation	P_{D1}	6.7(With infinite heatsink)	W
	P_{D2}	1.6(Without heatsink, stand-alone operation)	W
Junction Temperature	T_j	+125	°C
Storage Temperature	T_{stg}	–40 to +125	°C

■Applications

- For BS and CS antenna power supplies
- For stabilization of the secondary stage of switching power supplies
- Electronic equipment

■Recommended Operating Conditions

Parameter	Symbol	Ratings		Unit
		min.	max.	
DC Input Voltage Range	V_{IN}	Ch2 $V_{Omax.}$+2	40	V
Output Current Range per Channel	I_O	0	0.5	A
Operating Temperature Range	T_{jop}	–20	+125	°C

■Electrical Characteristics

(T_a=25°C)

	Parameter	Symbol	Ratings STA801M min.	typ.	max.	Unit
Ch1	Output voltage 1	V_{O1}	4.80	5.00	5.20	V
		Conditions	V_{IN}=20V, I_O=0.3A			
	Efficiency *	η1		80		%
		Conditions	V_{IN}=20V, I_O=0.3A			
	Temperature Coefficient of Output Voltage	$\Delta V_O/\Delta T_{a1}$		±0.5		mV/°C
	Line Regulation	ΔV_{OLINE1}		30	90	mV
		Conditions	V_{IN}=10 to 30V, I_O=0.3A			
	Load Regulation	ΔV_{OLOAD1}		10	40	mV
		Conditions	V_{IN}=20V, I_O=0.1 to 0.4A			
Ch2 (Select one output)	Output voltage 2-1	V_{O2-1}	8.64	9.00	9.36	V
		Conditions	V_{IN}=20V, I_O=0.3A			
	Output voltage 2-2	V_{O2-2}	11.04	11.50	11.96	V
		Conditions	V_{IN}=20V, I_O=0.3A			
	Output voltage 2-3	V_{O2-3}	11.62	12.10	12.58	V
		Conditions	V_{IN}=20V, I_O=0.3A			
	Output voltage 2-4	V_{O2-4}	14.88	15.50	16.12	V
		Conditions	V_{IN}=20V, I_O=0.3A			
V_{O2-4}	Efficiency*	η		89		%
		Conditions	V_{IN}=20V, I_O=0.3A			
	Temperature Coefficient of Output Voltage	$\Delta V_O/\Delta T_a$		±2.0		mV/°C
	Line Regulation	ΔV_{OLINE}		40	130	mV
		Conditions	V_{IN}=20 to 30V, I_O=0.3A			
	Load Regulation	ΔV_{OLOAD}		30	120	mV
		Conditions	V_{IN}=20V, I_O=0.1 to 0.4A			
Common	No-load Circuit Current	I_{CC}		15		mA
	Oscillation Frequency	f		125		kHz
	Overcurrent Protection Starting Current	I_{S1}	0.51	0.7		A

* Efficiency indicates the value when only one channel is active. The value can be calculated as shown below. 7.5mA is deducted for the no-load circuit current of $\frac{I_{CC}}{2}$ at unused output.

$$\eta = \frac{V_O \cdot I_O}{V_{IN} \cdot (I_{IN} - 0.0075)} \times 100(\%)$$

■External Dimensions (SIP10 [STA 10Pin])

(Unit : mm)

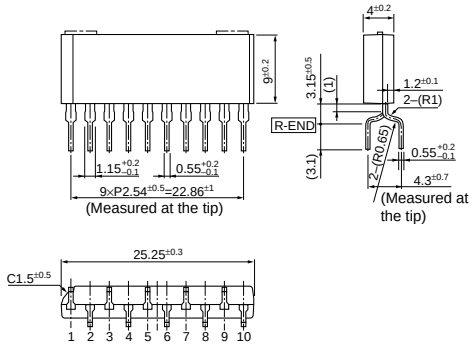

Pin Assignment

①	V_{O2} Cont	⑧	SS2
②	V_{OS1}	⑨	V_{OS2}–2
③	SS1	⑩	V_{OS2}–1
④	SW_{OUT1}		
⑤	GND		Plastic Mold Package Type
⑥	V_{IN}		Flammability: UL94V-0
⑦	SW_{OUT2}		Product Mass: Approx. 2.5g

■Block Diagram

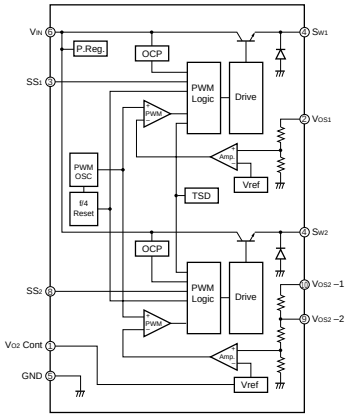

■Typical Connection Diagram

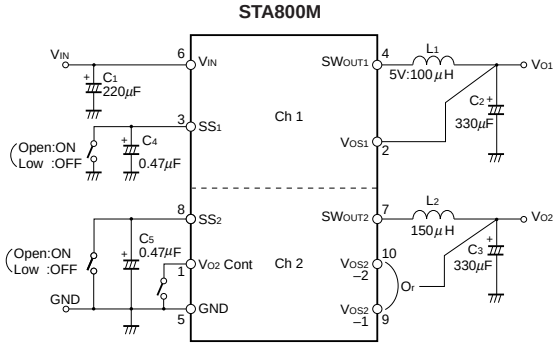

For how to connect VOS2-1 and VOS2-2 of Channel 2, refer to the output selection method on the Sanken web site.

■T_A-P_D Characteristics

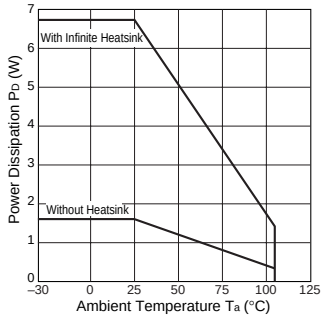

SPI-8001TW/SPI-8002TW/SPI-8003TW 2-Output, Step-down Switching Mode Regulator ICs

■Features

- 2 regulators combined in one package
- Output current: 1.5A × 2 (HSOP 16 Pin Surface mount package)
- High efficiency: TYP80% (SPI-8001TW), TYP78% (SPI-8002TW)
- Variable output voltage: 1.0 to 16V (SPI-8001TW), 1.0 to 24V (SPI-8002TW)
- Built-in reference oscillator (250kHz): Enables to downsize a choke-coil
- Low circuit current consumption: ≤ 1μA (at output OFF)
- High accuracy reference voltage: ±1%
- Built-in foldback-overcurrent and thermal protection circuits
- Built-in ON/OFF circuit (soft start available) – per output

■Absolute Maximum Ratings*1

Parameter	Symbol	Ratings			Unit
		SPI-8001TW	SPI-8002TW	SPI-8003TW	
Input Voltage	V_{IN}	21	40	40	V
	V_{CC}	21	40	40	V
	$V_{C/E}$	21	40	40	V
Power Dissipation*2, *3	P_D	3.0			W
Junction Temperature	T_j	+135		+150	°C
Storage Temperature	T_{stg}	–40 to +135		–40 to +150	°C
Thermal Resistance (junction to case)*2	$\theta_{j\text{-}c}$	9.0			°C/W
Thermal Resistance (junction to ambient air)*2	$\theta_{j\text{-}a}$	35.8			°C/W

*1: Absolute maximum ratings show the destructive limit. No parameter should exceed the ratings in transient or normal operations.
*2: When mounted on glass-epoxy board 70cm^2 (copper laminate area 30.8cm^2).
*3: Limited by thermal protection.

■Applications

- Onboard local power supplies
- OA equipment
- For stabilization of the secondary-side output voltage of switching power supplies

■Recommended Operating Conditions*1

Parameter	Symbol	Ratings						Unit
		SPI-8001TW		SPI-8002TW		SPI-8003TW		
		min.	max.	min.	max.	min.	max.	
Input Voltage Range	V_{IN}	V_O+3	20	V_O+3	38	V_O+3	38	V
	V_{CC}	4.5	20	4.5	38	4.5	38	V
	$V_{C/E}$		20		38		38	V
Output Voltage Range	V_O	1	16	1	24	1	24	V
Output Current Range	I_O		1.5		1.5		1.5	A
Operating Junction Temperature Range	T_{jop}	–30	+135	–30	+135	–30	+125	°C
Operating Temperature Range	T_{op}	–30	+135	–30	+135	–30	+85	°C

*1: Recommended operating conditions show the operating conditions required for the normal circuit function described in the electrical characteristics. These conditions must be followed in actual use.

■Electrical Characteristics*1

(T_a=25°C)

Parameter		Symbol	Ratings									Unit
			SPI-8001TW			SPI-8002TW			SPI-8003TW			
			min.	typ.	max.	min.	typ.	max.	min.	typ.	max.	
Reference Voltage		V_{REF}	0.996	1.006	1.016	0.996	1.006	1.016	0.966	1.006	1.016	V
		Conditions	V_{IN}=10V, V_O=1V, I_O=0.1A						V_{IN}=14V, I_O=0.1A			
Temperature Coefficient of Reference Voltage		$\Delta V_{REF}/\Delta T$		±0.1			±0.1			±0.1		mV/°C
		Conditions	V_{IN}=10V, V_O=1V, I_O=0.1A, Ta=–30 to +135°C						V_{IN}=14V, I_O=0.1A, Ta=–30 to +125°C			
Efficiency 1*2		Eff1		80			78			78		%
		Conditions	V_{IN}=V_{CC}=15V, V_O=5V, I_O=0.5A, I_{IN}: including I_{CC}						V_{IN}= V_{CC}=14V, V_O=5V, I_O=0.5A, I_{IN} : including I_{CC}			
Efficiency 2*2		Eff2		83			81			81		%
		Conditions	V_{IN}=15V, V_O=5V, I_O=0.5A, V_{CC}=5V, I_{IN}: excluding I_{CC}						V_{IN}=14V, V_{CC}=5V, V_O=5V, I_O=0.5A, I_{IN} : excluding I_{CC}			
Oscillation Frequency		f_{osc}		250		215	250	285	200		400	kHz
		Conditions	V_{IN}=V_{CC}=15V, V_O=5V, I_O=0.5A						V_{IN}=14V, I_O=0.1A, C_{OSC}=100pF			
Line Regulation		V_{LINE}		30	60		30	60		30	60	mV
		Conditions	V_{IN}=V_{CC}=10 to 20V, V_O=5V, I_O=1A						V_{IN}=V_{CC}=9 to 18V, V_O=5V, I_O=1A			
Load Regulation		V_{LOAD}		10	40		10	40		10	40	mV
		Conditions	V_{IN}=V_{CC}=15V, V_O=5V, I_O=0.2 to 1.5A						V_{IN}=V_{CC}=14V, V_O=5V, I_O=0.2 to 1.5A			
Overcurrent Protection Starting Current		I_S	1.6			1.6			1.6			A
		Conditions	V_{IN}=V_{CC}=15V						V_{IN}=V_{CC}=14V			
Quiescent Circuit Current 1		I_{IN}		4			4			4		mA
		Conditions	V_{IN}=15V, V_{CC}=5V, I_O=0V, V_O≤12V						V_{IN}=14V, V_{CC}=5V, I_O=0A, V_O≤12V			
Quiescent Circuit Current 2		I_{CC}		8.5			8.5			8.5		mA
		Conditions	V_{CC}=15V, I_O=0A						V_{CC}=14V, I_O=0A			
Quiescent Circuit Current 3		$I_{IN\ (off)}$			1			1			1	μA
		Conditions	V_{IN}=15V, $V_{C/E}$=0V or Open						V_{IN}=14V, $V_{C/E}$=0V or Open			
Quiescent Circuit Current 4		$I_{CC\ (off)}$			1			1			1	μA
		Conditions	V_{CC}=15V, $V_{C/E}$=0V or Open						V_{IN}=14V, $V_{C/E}$=0V or Open			
Quiescent Circuit Current 5		$I_{IN\ (ssov)}$	—							4		mA
		Conditions	—						V_{IN}=14V, V_{CC}=5V, I_O=0A, SS1=SS2=0V			
Quiescent Circuit Current 6		$I_{CC\ (ssov)}$	—							8.5		mA
		Conditions	—						V_{CC}=14V, I_O=0V, SS1=SS2=0V			
C/E Pin	High Level Voltage	$V_{C/EH}$	2			2			2			V
		Conditions	V_{IN}=V_{CC}=15V						V_{IN}=V_{CC}=14V			
	Low Level Voltage	$V_{C/EL}$			0.8			0.8			0.8	V
		Conditions	V_{IN}=V_{CC}=15V						V_{IN}=V_{CC}=14V			
	Inflow Current at High	$I_{C/EH}$		95			95			95		μA
		Conditions	$V_{C/E}$=20V						$V_{C/E}$=20V			
SS Pin*3	Low Level Voltage	V_{SSL}			0.5			0.5			0.5	V
		Conditions	V_{IN}=V_{CC}=15V						V_{IN}=V_{CC}=14V			
	Inflow Current at Low	I_{SSL}		60	80		60	80		60	80	μA
		Conditions	V_{SSL}=0V, V_{IN}=V_{CC}=15V						V_{SSL}=0V, V_{IN}=V_{CC}=14V			

*1: Electrical characteristics show the characteristic ratings guaranteed when operating the ICs under the measurement conditions described in the above table.

*2: Efficiency is calculated from the following formula.

$$\eta\ (\%) = \frac{V_O \cdot I_O}{V_{IN} \cdot I_{IN}} \times 100$$

*3: Pin 6 and pin 11 are the SS pins. Soft start at power on can be performed with capacitors connected to these pins. The outputs can also be turned ON/OFF with these pins. The outputs are stopped by setting the voltages of these pins to V_{SSL} or lower. SS-pin voltages can be changed with open-collector drive circuits of transistors.
When using both the soft-start and ON/OFF functions together, the discharge currents from C_4 and C_5 flow into the ON/OFF control transistors respectively. Therefore, limit the currents securely to protect the transistors if C_4 and C_5 capacitances are large. The SS pins are pulled up to the power supply in the ICs, so applying the external voltages are prohibited.

■External Dimensions (HSOP16)

(Unit : mm)

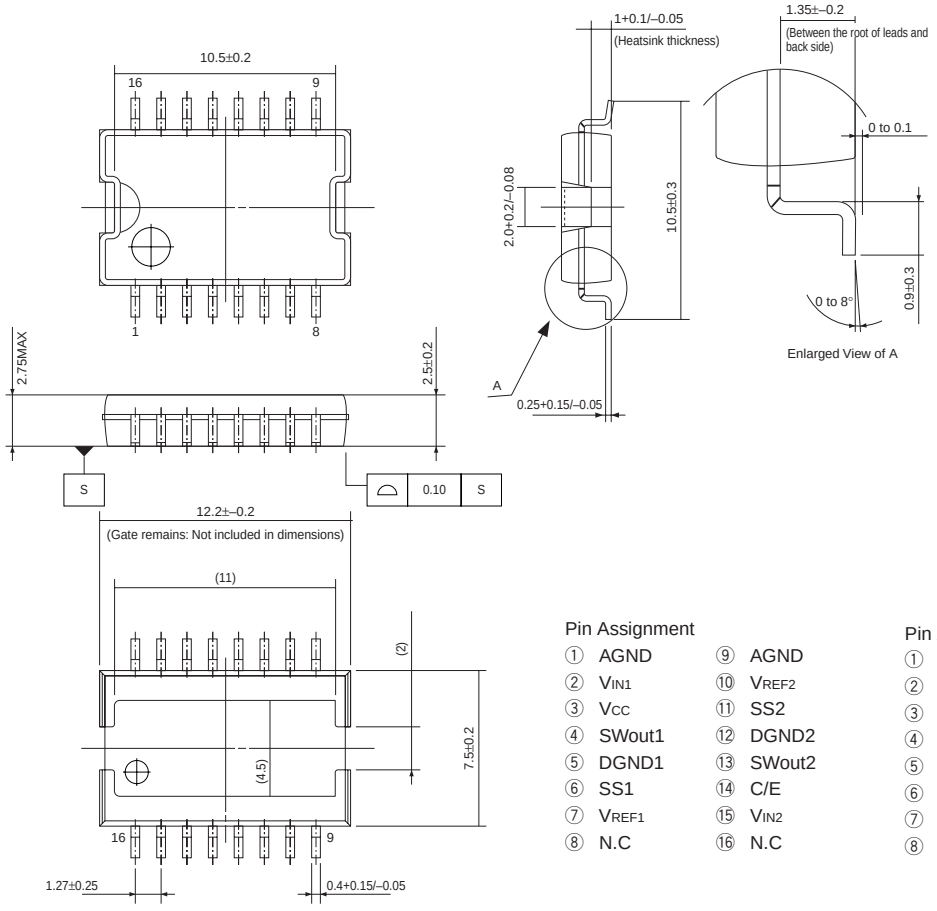

Pin Assignment

①	AGND	⑨	AGND
②	V_{IN1}	⑩	V_{REF2}
③	V_{CC}	⑪	SS2
④	SWout1	⑫	DGND2
⑤	DGND1	⑬	SWout2
⑥	SS1	⑭	C/E
⑦	V_{REF1}	⑮	V_{IN2}
⑧	N.C	⑯	N.C

Pin Assignment (SPI-8003TW)

①	AGND	⑨	AGND
②	V_{IN1}	⑩	R_{OSC}
③	V_{CC}	⑪	V_{REF2}
④	SWout1	⑫	SS2
⑤	DGND1	⑬	DGND2
⑥	SS1	⑭	SWout2
⑦	V_{REF1}	⑮	C/E
⑧	C_{OSC}	⑯	V_{IN2}

Product Mass : Approx.0.86g

■Block Diagram

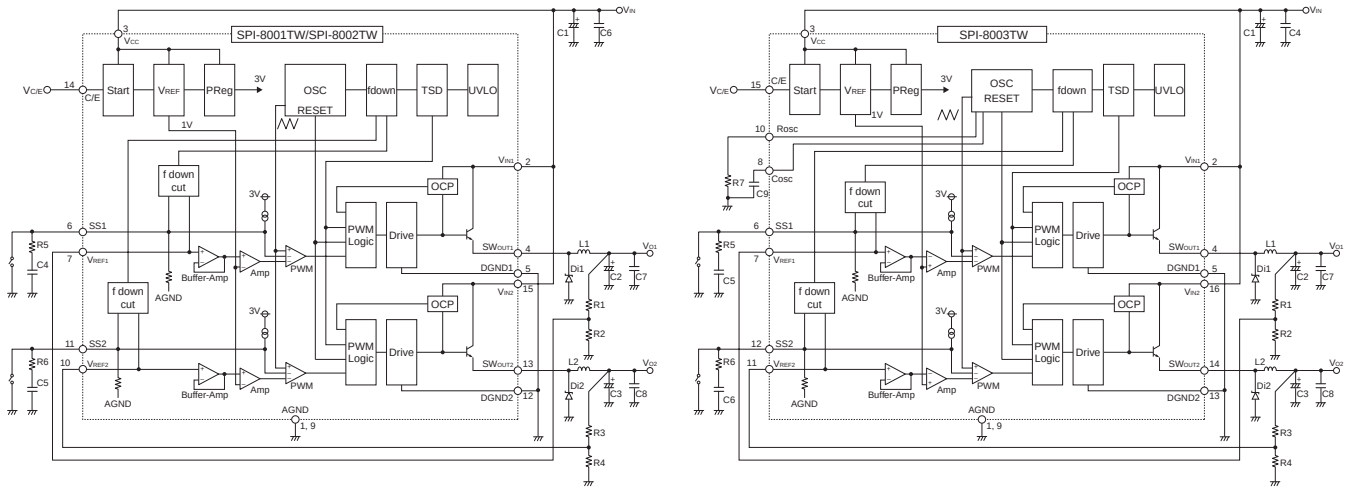

■Typical Connection Diagram

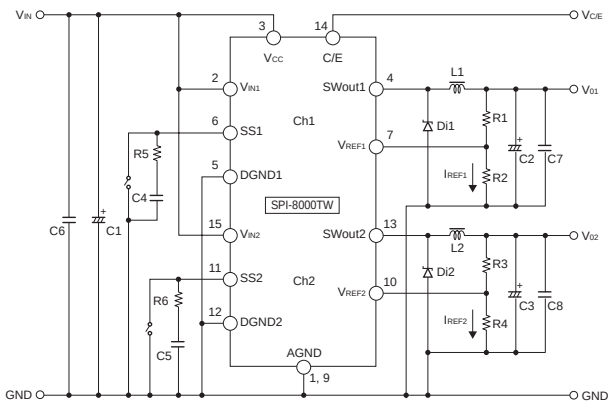

C1	: 220 μF/50V	R5, R6	: 1kΩ
C2, C3	: 470 μF/25V	L1, L2	: 47 μH
C4, C5	: 1 μF	Di1, Di2	: SJPB-H6
C6, C7, C8	: 0.1 μF	(Sanken)	

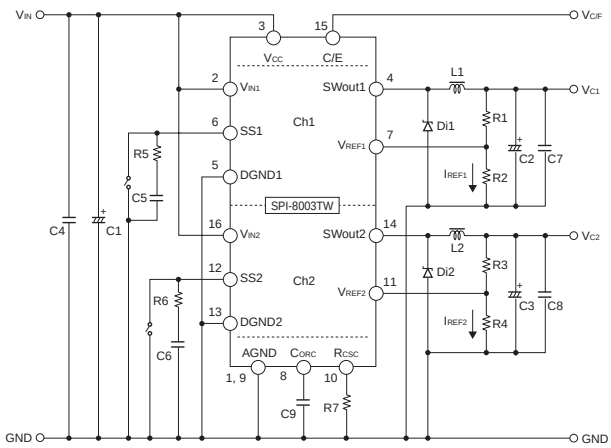

C1	: 220 μF/50V	C9	: 100pF/10V
C2, C3	: 470 μF/25V	L1, L2	: 47 μH
C4	: 1 μF/50V	R2, R4	: 1kΩ
C5, C6	: 1 μF/10V	R5, R6	: 1kΩ
C7, C8	: 0.1 μF/50V	Di1, Di2	: SJPB-H6 (Sanken)

Diodes Di1, Di2

- Be sure to use Schottky-barrier diodes for Di1 and Di2.
  If other diodes like fast recovery diodes are used, IC may be destroyed because of the reverse voltage generated by the recovery voltage or ON voltage.

Choke coils L1, L2

- If the winding resistance of the choke coil is too high, the efficiency may drop below the rated value.
- As the overcurrent protection starting current is about 2.0A, take care concerning heat radiation from the choke coil caused by magnetic saturation due to overload or short-circuited load.
- Use a closed-magnetic-path coil to prevent interference between the channels $SW_{out}1$ and $SW_{out}2$.

Capacitors C1, C2, C3

- As large ripple currents flow through C1, C2 and C3, use high-frequency and low-impedance capacitors suitable for switching mode power supplies. Especially when the impedance of C2 and C3 are high, the switching waveforms may become abnormal at low temperatures. For C2 and C3, do not use capacitors with extremely low equivalent series resistance (ESR) such as OS capacitors or tantalum capacitors, which may cause abnormal oscillation.

Resistors R1, R2, R3, R4

- R1, R2, R3 and R4 are resistors for setting output voltages. Set the resistors so that I_{REF} is approx. 1 mA. For example, R1 and R2 can be calculated as shown below.

$$R1=\frac{(V_{O1}-V_{REF1})}{I_{REF1}}=\frac{(V_{O1}-V)}{1\times10^{-3}}\ (\Omega),\ R2=\frac{V_{REF1}}{I_{REF1}}=\frac{1}{1\times10^{-3}}\fallingdotseq1(K\Omega)$$

◎ To create the optimum operating conditions, place the components as close as possible to each other.

■T_a-P_D Characteristics

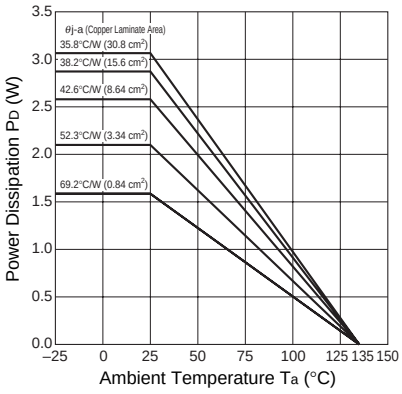

$$P_D = V_O\cdot I_O\left(\frac{100}{\eta\chi}-1\right)-V_F\cdot I_O\left(1-\frac{V_O}{V_{IN}}\right)$$

V_O : Output Voltage
V_{IN} : Input Voltage
I_O : Output Current
$\eta\chi$: Efficiency (%)
V_F : D_1 Forward Voltage
SJPB-H6···0.45V (b=1A)

Note 1: The efficiency depends on the input voltage and the output current. Therefore, obtain the value from the efficiency graph and substitute the percentage in the formula above.

Note 2: Thermal design for D_1 must be considered separately.

SI-3000KWM Series 2-Output, Surface-Mount, Low Dropout Voltage Linear Regulator ICs

■Features

- Compact surface-mount package (TO252-5)
- Output current: 1.0A × 2
- Low dropout voltage: $V_{DIF} \leq 0.6V$ (at I_O = 1A)
- Built-in overcurrent and thermal protection circuits

■Applications

- Secondary stabilized power supply (local power supply)

■Absolute Maximum Ratings

(T_a=25°C)

Parameter	Symbol	Ratings	Unit
		SI-3002KWM	
DC Input Voltage	V_{IN}*1	18	V
Output Control Terminal Voltage	V_C	6	V
Output Current*1	I_{O1}	1.0	A
	I_{O2}	1.0	
Power Dissipation (with two outputs ON)	P_D*2	1	W
Junction Temperature	T_j	–30 to +125	°C
Operating Ambient Temperature	T_{op}	–30 to +85	°C
Storage Temperature	T_{stg}	–40 to +125	°C
Thermal Resistance (Junction to Ambient Air)	$\theta_{j\text{-}a}$	95	°C/W
Thermal Resistance (Junction to Lead)	$\theta_{j\text{-}c}$	6	°C/W

*1: V_{IN} (max), I_{O1} (max) and I_{O2} (max) are restricted by the relation $P_D = (V_{IN} - V_{O1}) \times I_{O1} + (V_{IN} - V_{O2}) \times I_{O2}$.
*2: When mounted on glass-epoxy board of 30 × 30mm^2 (copper laminate area 4.3%)
Thermal protection may operate when the junction temperature exceeds 135°C.

■Electrical Characteristics

Parameter		Symbol	Ratings			Unit
			SI-3002KWM			
			min.	typ.	max.	
Output Voltage		V_{O1}	3.234	3.300	3.366	V
		Conditions	V_{IN}=5V, I_O=10mA			
		V_{O2}	2.450	2.500	2.550	
		Conditions	V_{IN}=5V, I_O=10mA			
Line Regulation		ΔV_{OLINE1}			20	mV
		Conditions	V_{IN}=4.5 to 10V, I_O=10mA			
		ΔV_{OLINE2}			20	
		Conditions	V_{IN}=4.5 to 10V, I_O=10mA			
Load Regulation		ΔV_{OLOAD1}			30	mV
		Conditions	V_{IN}=5V, I_O=0 to 1A			
		ΔV_{OLOAD2}			30	
		Conditions	V_{IN}=5V, I_O=0 to 1A			
Dropout Voltage		V_{DIF1}			0.6	V
		Conditions	I_O=1A			
Temperature Coefficient of Output Voltage		$\Delta V_{O1}/\Delta T_a$		±0.3		mV/°C
		Conditions	T_j=0 to 100°C			
		$\Delta V_{O2}/\Delta T_a$		±0.3		
		Conditions	T_j=0 to 100°C			
Ripple Rejection		R_{REJ1}		60		dB
		Conditions	V_{IN}=5V, f=100 to 120Hz			
		R_{REJ2}		60		
		Conditions	V_{IN}=5V, f=100 to 120Hz			
Overcurrent Protection Starting Current*1		I_{S1} 1	1.2			A
		Conditions	V_{IN}=5V			
		I_{S1} 2	1.2			
		Conditions	V_{IN}=5V			
Quiescent Circuit Current		I_q		1	1.5	mA
		Conditions	V_{IN}=5V, I_O=0A, V_C=2V			
Circuit Current at Output OFF		$I_{q\,(OFF)}$			0.5	mA
		Conditions	V_{IN}=5V, V_C=0V			
V_C Terminal	Control Voltage (Output ON)*2	V_C, IH	2			V
	Control Voltage (Output OFF)	V_C, IL			0.8	V
	Control Current (Output ON)	I_C, IH			5	μA
		Conditions	V_C=2.7V			
	Control Current (Output OFF)	I_C, IL	–100			μA
		Conditions	V_C=0.4V			
Output OFF Voltage		$V_{O(OFF)}$			0.5	V

*1: I_{S1} 1 and I_{S1} 2 are specified at the 5% drop points of output voltages V_{O1} and V_{O2} on the condition that V_{IN} = the condition of protection starting current, I_O = 10 mA.
*2: Output is ON when the output control terminal V_C is open. Each input level is equivalent to LS-TTL. Therefore, the devices can be driven directly by LS-TTLs.
Channels 1 and 2 are turned on or off at the same time.

■External Dimensions (TO252-5)

(Unit : mm)

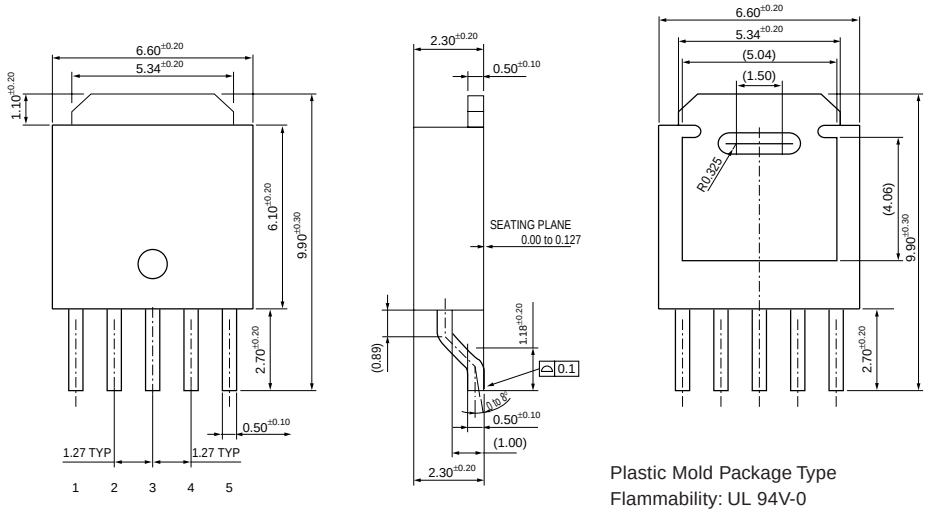

Plastic Mold Package Type
Flammability: UL 94V-0
Product Mass: Approx. 1.48 g

Pin Assignment
① V_C
② V_{O1}
③ GND
④ V_{IN}
⑤ V_{O2}

■Block Diagram

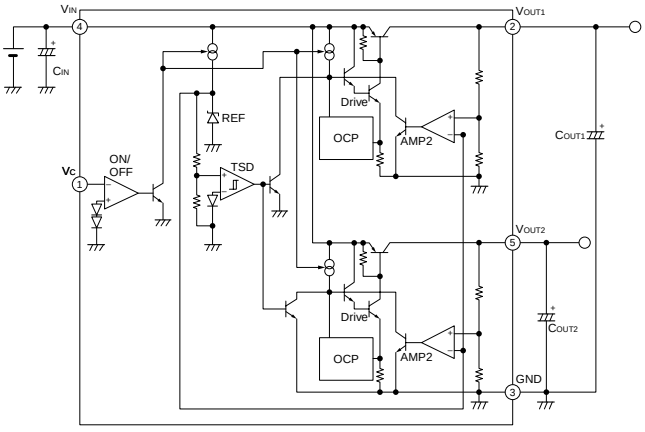

Selection Guide

2-Phase Stepper Motor Unipolar Driver ICs

Excitation Method	Output Current (A) 1.0	1.2	1.5	2.0	3.0	Motor Supply Voltage (V)	Package	Remarks	Page
2-Phase Excitation	SLA7022MU		SLA7029M			to 46	ZIP15Pin with Fin		100
	SMA7022MU		SMA7029M			to 46	ZIP15Pin		100
			SMA7036M			to 46	ZIP15Pin		102
2-Phase/1-2 Phase Excitation	SLA7027MU		SLA7024M		SLA7026M	to 46	ZIP18Pin with Fin		104
	SLA7031M		SLA7032M		SLA7033M	to 46	ZIP18Pin with Fin		106
	SLA7050M			SLA7051M	SLA7052M	to 46	ZIP18Pin with Fin	Built-in sequencer	108
	SLA7070MR		SLA7071MR	SLA7072MR	SLA7073MR	to 46	ZIP23Pin with Fin	Built-in sequencer, Current sensing resistors	110
	SLA7070MPR		SLA7071MPR	SLA7072MPR	SLA7073MPR	to 46	ZIP23Pin with Fin	Built-in sequencer, Current sensing resistors, Protection circuit	110
	SLA7080MR		SLA7081MR	SLA7082MR	SLA7083MR	to 46	ZIP23Pin with Fin	Built-in Current sensing resistors	112
	SLA7080MPR		SLA7081MPR	SLA7082MPR	SLA7083MPR	to 46	ZIP23Pin with Fin	Built-in Current sensing resistors, Protection circuit	112
2W 1-2 Phase Excitation μ Step Support		SLA7042M			SLA7044M	to 46	ZIP18Pin with Fin		114
	SLA7065M			SLA7066M	SLA7067M	to 46	ZIP21Pin with Fin	Built-in sequencer	116
4W 1-2 Phase Excitation μ Step Support			SI-7321M			to 46	HSOP44Pin	Built-in sequencer	118
	SLA7060M			SLA7061M	SLA7062M	to 46	ZIP21Pin with Fin	Built-in sequencer	120
	SLA7075MR		SLA7076MR	SLA7077MR	SLA7078MR	to 46	ZIP23Pin with Fin	Built-in sequencer, Current sensing resistors	122
	SLA7075MPR		SLA7076MPR	SLA7077MPR	SLA7078MPR	to 46	ZIP23Pin with Fin	Built-in sequencer, Current sensing resistors, Protection circuit	122

Serial Signal Generator for SLA704x

Part Number	Power Supply Voltage (V)	Package	Page
PG001M	4.5 to 5.5	DIP16	124

3-Phase Stepper Motor Driver ICs

Excitation Method	Part Number	Power Supply Voltage (V)	Output Current (A)	Package	Remarks	Page
2-Phase/2-3 Phase Excitation	SLA7611M	to 36	3.0	ZIP18 with Fin(SLA18Pin)		126

5-Phase Stepper Motor Driver ICs

Excitation Method	Part Number	Power Supply Voltage(V)	Package	Remarks	Page
New Pentagon Drive	SI-7510	to 44	DIP30Pin	SLA5073+SLA5074 for Outputs	128

Brush DC Motor Driver ICs

Part Number	Output Current (A) Average	Maximum	Power Supply Voltage (V)	Package	Remarks	Page
STA6940M	4.0	8.0(tw<100μS)	10 to 44	ZIP18Pin	Single Full Bridge	130

Brushless DC Motor Driver ICs

Part Number	Output Current (A)	Power Supply Voltage(V)	Package	Remarks	Page
SPI-6631M	3.0	13 to 33	HSOP16Pin	Predrive+Power	132

High Voltage 3 Phase Motor Driver ICs

Part Number	Breakdoun Voltage	Output Current (A)	Ron/Vsat (typ)	Package	Package Type	Main Switch	Source Terminal Number	Protection Circuits* UVLO	THD	TSD	OCP	STP	Main Application	Remarks	Page
SX68001M	250V	2.0	1.25Ω	SOP27pin	Surface-mount	MOS	1	○	—	○	○	—	Fan Motor	Built-in a 7.5V regulator output	134
SMA6821MP			1.4Ω	SMA 24pin	Full Mold	MOS	2	○	○	—	—	—	Fan Motor	Built-in a 7.5V regulator output	136
SLA6826M			1.4Ω	SLA 24pin	With Fin	MOS	2	○	○	—	—	—	Fan Motor	Built-in a 7.5V regulator output	136
SMA6861M			1.4Ω	SMA 24pin	Full Mold	MOS	2	○	—	○	○	—	Fan Motor		138
SX68002M	500V	1.5	3.2Ω	SOP27pin	Surface-mount	MOS	1	○	—	○	○	—	Fan Motor	Built-in a 7.5V regulator output	134
SMA6822MP			3.6Ω	SMA 24pin	Full Mold	MOS	2	○	○	—	—	—	Fan Motor	Built-in a 7.5V regulator output	136
SLA6827M			3.6Ω	SLA 24pin	With Fin	MOS	2	○	○	—	—	—	Fan Motor	Built-in a 7.5V regulator output	136
SMA6862M			3.6Ω	SMA 24pin	Full Mold	MOS	2	○	—	○	○	—	Fan Motor		138
SX68003M		2.5	2.0Ω	SOP27pin	Surface-mount	MOS	1	○	—	○	○	—	Fan Motor	Built-in a 7.5V regulator output	134
SMA6823MP			2.0Ω	SMA 24pin	Full Mold	MOS	2	○	○	—	—	—	Fan Motor	Built-in a 7.5V regulator output	136
SLA6828M			2.0Ω	SLA 24pin	With Fin	MOS	2	○	○	—	—	—	Fan Motor	Built-in a 7.5V regulator output	136
SMA6863M			2.0Ω	SMA 24pin	Full Mold	MOS	2	○	—	○	○	—	Fan Motor		138
SLA6868M			2.0Ω	SLA 24pin	With Fin	MOS	2	○	—	○	○	—	Fan Motor, Dishwaher Pump		138
SLA6805MP	600V	3.0	1.75V	SLA 23pin	With Fin	IGBT	2	○	—	—	○	—	Compressor for Refridgerator, Pump		140
SLA6845M			1.75V	SLA 24pin	With Fin	IGBT	3	○	○	—	—	—	Washing Machine Fan	3 shunt, Built-in a 7.5V regulator output	142
SCM1103M		5.0	1.7V	SCM	Full Mold	IGBT	3	○	—	—	○	○	Compressor for Refridgerator	3 shunt	144
SCM1104M		8.0	1.75V	SCM	Full Mold	IGBT	3	○	—	—	○	○	Compressor for Air-conditioner, Washing Machine Drum	3 shunt	144
SCM1104MF			1.75V	SCM	With Fin	IGBT	3	○	—	—	○	○	Compressor for Air-conditioner, Washing Machine Drum	3 shunt	144
SCM1101M		10	1.75V	SCM	Full Mold	IGBT	3	○	—	—	○	○	Compressor for Air-conditioner, Washing Machine Drum	3 shunt	144
SCM1101MF			1.75V	SCM	With Fin	IGBT	3	○	—	—	○	○	Compressor for Air-conditioner, Washing Machine Drum	3 shunt	144
SCM1106M			2.2V	SCM	Full Mold	IGBT	3	○	—	—	○	○	Compressor for Air-conditioner, Washing Machine Drum	3 shunt	144
SCM1106MF			2.2V	SCM	With Fin	IGBT	3	○	—	—	○	○	Compressor for Air-conditioner, Washing Machine Drum	3 shunt	144
SCM1105MF		15	1.75V	SCM	With Fin	IGBT	3	○	—	—	○	○	Compressor for Air-conditioner, Washing Machine Drum	3 shunt	144
SCM1110MF			2.2V	SCM	With Fin	IGBT	3	○	—	—	○	○	Compressor for Air-conditioner, Washing Machine Drum	3 shunt	144

* : UVLO..... Under Voltage Lock OUT
THD ..... Thermal Detect
TSD ..... Thermal Shut Down
OCP ..... Over Current Protection
STP ..... Shoot Through Prevention

Application Note

■ Setup Precautions

●Recommended mounting torque
0.588 to 0.784 [N•m](6.0 to 8.0 [kgf•cm])
●Recommended silicone grease
Shin-Etsu Chemical Co., Ltd.: G746
Momentive Performance Materials Inc.: YG-6260
Dow Corning Toray Silicone Co., Ltd.: SC102
Please select proper silicone grease carefully since the oil in some grease products may penetrate the device and result in an extremely short device life.

■ Handling Precautions

When using the following products that use C-MOS circuits for input terminals, observe the following.
SMA7036M/SLA7031M/SLA7032M/SLA7033M
SLA7050M/SLA7051M/SLA7052M
SLA7060M/SLA7061M/SLA7062M
SLA7065M/SLA7066M/SLA7067M
SLA7070MR/SLA7071MR/SLA7072MR/SLA7073MR
SLA7070MPR/SLA7071MPR/SLA7072MPR/SLA7073MPR
SLA7075MR/SLA7076MR/SLA7077MR/SLA7078MR
SLA7075MPR/SLA7076MPR/SLA7077MPR/SLA7078MPR
SLA7080MR/SLA7081MR/SLA7082MR/SLA7083MR
SLA7080MPR/SLA7081MPR/SLA7082MPR/SLA7083MPR
SMA6800M Series
SLA6800M Series
SCM1100M Series
●Carefully control the humidity of the room to prevent the buildup of static electricity. Since static electricity is particularly a problem during the winter, be sure to take sufficient precautions.
Take care to make sure that static electricity is not applied to the IC during wiring and assembly. Take precautions such as shorting the terminals of the printed circuit board to ensure that they are at the same electrical potential.

SLA7022MU/SLA7029M/SMA7022MU/SMA7029M 2-Phase Excitation

■Absolute Maximum Ratings

(T_a=25°C)

Parameter	Symbol	Ratings				Unit
		SLA7022MU	SLA7029M	SMA7022MU	SMA7029M	
Motor Supply Voltage	V_{CC}	46				V
FET Drain-Source Voltage	V_{DSS}	100				V
Control Supply Voltage	V_S	46				V
TTL Input Voltage	V_{IN}	7				V
Reference Voltage	V_{REF}	2				V
Output Current	I_O	1	1.5	1	1.5	A
Power Dissipation	P_{D1}	4.5 (Without Heatsink)		4.0 (Without Heatsink)		W
	P_{D2}	35 (T_C=25°C)		28 (T_C=25°C)		W
Channel Temperature	T_{ch}	+150				°C
Storage Temperature	T_{stg}	–40 to +150				°C

■Electrical Characteristics

(T_a=25°C)

	Parameter	Symbol	Ratings												Unit
			SLA7022MU			SLA7029M			SMA7022MU			SMA7029M			
			min.	typ.	max.	min.	typ.	max.	min.	typ.	max.	min.	typ.	max.	
DC Characteristics	Control Supply Current	I_S		10	15		10	15		10	15		10	15	mA
		Condition	V_S=44V			V_S=44V			V_S=44V			V_S=44V			
	Control Supply Voltage	V_S	10	24	44	10	24	44	10	24	44	10	24	44	V
	FET Drain-Source Voltage	V_{DSS}	100			100			100			100			V
		Condition	V_S=44V, I_{DSS}=250μA			V_S=44V, I_{DSS}=250μA			V_S=44V, I_{DSS}=250μA			V_S=44V, I_{DSS}=250μA			
	FET ON Voltage	V_{DS}			0.85			0.6			0.85			0.6	V
		Condition	I_D=1A, V_S=14V			I_D=1A, V_S=14V			I_D=1A, V_S=14V			I_D=1A, V_S=14V			
	FET Drain Leakage Current	I_{DSS}			4			4			4			4	mA
		Condition	V_{DSS}=100V, V_S=44V			V_{DSS}=100V, V_S=44V			V_{DSS}=100V, V_S=44V			V_{DSS}=100V, V_S=44V			
	FET Diode Forward Voltage	V_{SD}			1.2			1.1			1.2			1.1	V
		Condition	I_D=1A			I_D=1A			I_D=1A			I_D=1A			
	TTL Input Current	I_{IH}			40			40		40			40		μA
		Condition	V_{IH}=2.4V, V_S=44V			V_{IH}=2.4V, V_S=44V			V_{IH}=2.4V, V_S=44V			V_{IH}=2.4V, V_S=44V			
		I_{IL}			–0.8			–0.8			–0.8			–0.8	mA
		Condition	V_{IL}=0.4V, V_S=44V			V_{IL}=0.4V, V_S=44V			V_{IL}=0.4V, V_S=44V			V_{IL}=0.4V, V_S=44V			
	TTL Input Voltage (Active High)	V_{IH}	2			2			2			2			V
		Condition	I_D=1A			I_D=1A			I_D=1A			I_D=1A			
		V_{IL}			0.8			0.8			0.8			0.8	
		Condition	V_{DSS}=100V			V_{DSS}=100V			V_{DSS}=100V			V_{DSS}=100V			
	TTL Input Voltage (Active Low)	V_{IH}	2			2			2			2			V
		Condition	V_{DSS}=100V			V_{DSS}=100V			V_{DSS}=100V			V_{DSS}=100V			
		V_{IL}			0.8			0.8			0.8			0.8	
		Condition	I_D=1A			I_D=1A			I_D=1A			I_D=1A			
AC Characteristics	Switching Time	T_r		0.5			0.5			0.5			0.5		μs
		Condition	V_S=24V, I_D=0.8A			V_S=24V, I_D=1A			V_S=24V, I_D=0.8A			V_S=24V, I_D=1A			
		T_{stg}		0.7			0.7			0.7			0.7		
		Condition	V_S=24V, I_D=0.8A			V_S=24V, I_D=1A			V_S=24V, I_D=0.8A			V_S=24V, I_D=1A			
		T_f		0.1			0.1			0.1			0.1		
		Condition	V_S=24V, I_D=0.8A			V_S=24V, I_D=1A			V_S=24V, I_D=0.8A			V_S=24V, I_D=1A			

■Internal Block Diagram

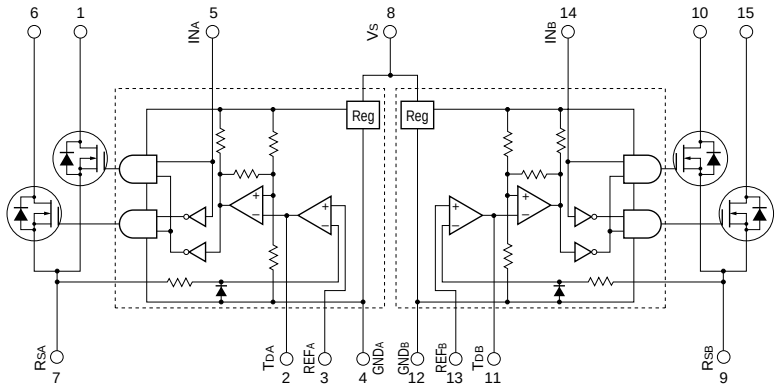

1, 6, 10, 15pin
Description of pins

	Excitation input signal	
	Active H	Active L
1pin	OUT A	OUT $\overline{A}$
6pin	OUT $\overline{A}$	OUT A
10pin	OUT B	OUT $\overline{B}$
15pin	OUT $\overline{B}$	OUT B

■Typical Connection Diagram (Recommended component values)

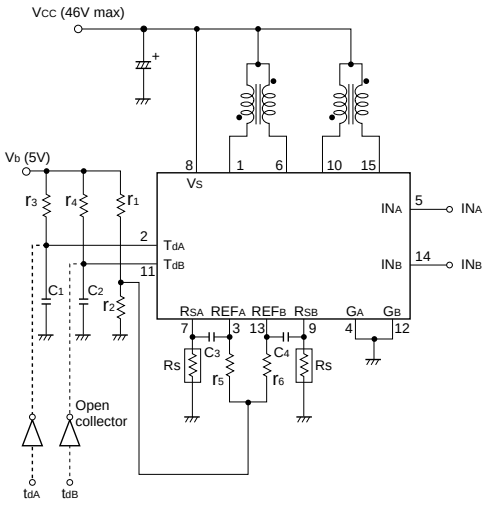

Excitation signal time chart
2-phase excitation

clock	0	1	2	3	0	1
IN_A	H	H	L	L	H	H
IN_B	L	H	H	L	L	H

1-2 phase excitation

clock	0	1	2	3	4	5	6	7	0	1	2	3
IN_A	H	H	H	H	L	L	L	L	H	H	H	H
td_A	L	L	L	H	L	L	L	H	L	L	L	H
IN_B	L	L	H	H	H	H	L	L	L	L	H	H
td_B	L	H	L	L	L	H	L	L	L	H	L	L

●tdA and tdB are signals before the inverter stage.

r1 : 510Ω
r2 : 100Ω (VR)
r3 : 47kΩ
r4 : 47kΩ
r5 : 2.4kΩ
r6 : 2.4kΩ

C1 : 330 to 500pF
C2 : 330 to 500pF
C3 : 2200pF
C4 : 2200pF
Rs : 1.8Ω typ (7022MU) (1~2W)
1Ω typ (7029M)

■External Dimensions (ZIP15 with Fin [SLA15Pin] /ZIP15[SMA15Pin])

(Unit:mm)

SLA7022MU/SLA7029M

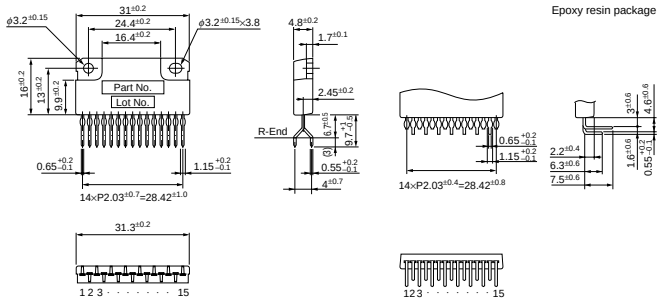

Forming No. No.853

Forming No. No.855

Product Mass : Approx.6g

SMA7022MU/SMA7029MA

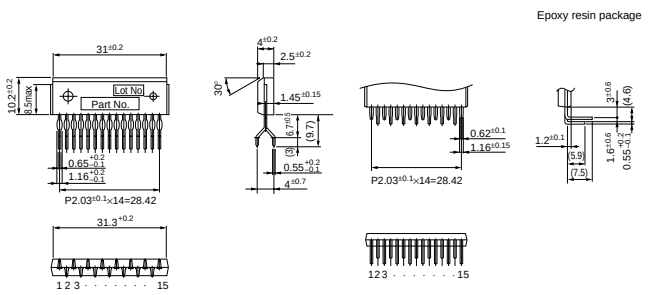

Forming No. No.1054

Forming No. No.1055

Product Mass : Approx.4g

SMA7036M 2-Phase Excitation

■Absolute Maximum Ratings

Parameter	Symbol	Ratings	Unit
Motor Supply Voltage	V_{CC}	46	V
Control Supply Voltage	V_S	46	V
FET Drain-Source Voltage	V_{DSS}	100	V
TTL Input Voltage	V_{IN}	–0.3 to +7	V
SYNC Terminal Voltage	V_{SYNC}	–0.3 to +7	V
Reference Voltage	V_{REF}	–0.3 to +7	V
Sense Voltage	V_{RS}	–5 to +7	V
Output Current	I_O	1.5	A
Power Dissipation	P_{D1}	4.0 (T_a=25°C)	W
	P_{D2}	28 (T_c=25°C)	W
Channel Temperature	T_{ch}	150	°C
Storage Temperature	T_{stg}	–40 to +150	°C
Operating Ambient Temperature	T_a	–20 to +85	°C

■Electrical Characteristics

	Parameter		Symbol	Ratings min.	Ratings typ.	Ratings max.	Unit
DC Characteristics	Control Supply Current		I_S		10	15	mA
			Condition	V_S=44V			
	Control Supply Voltage		V_S	10	24	44	V
	FET Drain-Source Voltage		V_{DSS}	100			V
			Condition	V_S=44V, I_{DSS}=250μA			
	FET ON Voltage		V_{DS}			0.6	V
			Condition	I_D=1A, V_S=10V			
	FET Diode Forward Voltage		V_{SD}			1.1	V
			Condition	I_{SD}=1A			
	FET Drain Leakage Current		I_{DSS}			250	μA
			Condition	V_{DSS}=100V, V_S=44V			
	IN Terminal	Active H	V_{IH}	2			V
			Condition	I_D=1A			
			V_{IL}			0.8	
			Condition	V_{DSS}=100V			
		Active L	V_{IH}	2			V
			Condition	V_{DSS}=100V			
			V_{IL}			0.8	
			Condition	I_D=1A			
		Input Current	I_I			±1	μA
			Condition	V_S=44V, V_I=0 or 5V			
	SYNC Terminal	Input Loltage	$V_{SYNC}H$	4.0			V
			Condition	Synchronous chopping mode			
			$V_{SYNC}L$			0.8	
			Condition	Asynchronous chopping mode			
		Input Current	$I_{SYNC}H$			0.1	mA
			Condition	V_S=44V, V_{YS}=5V			
			$I_{SYNC}L$			–0.1	
			Condition	V_S=44V, V_{YS}=0V			
	REF Terminal	Input Voltage	V_{REF}	0		2.0	V
			Condition	Reference voltage input			
			V_{REF}	4.0		5.5	
			Condition	Output FET OFF			
		Input Current	I_{REF}			±1	μA
			Condition	No synchronous trigger			
		Internal Resistance	R_{REF}		40		Ω
			Condition	Resistance between GND and REF terminal at synchronous trigger			
AC Characteristics	Switching Time		T_{on}		1.5		μs
			Condition	V_S=24V, I_D=1A			
			T_r		0.5		
			Condition	V_S=24V, I_D=1A			
			T_{stg}		0.9		
			Condition	V_S=24V, I_D=1A			
			T_f		0.1		
			Condition	V_S=24V, I_D=1A			
	Chopping OFF Time		T_{OFF}		12		μs
			Condition	V_S=24V			

■Internal Block Diagram

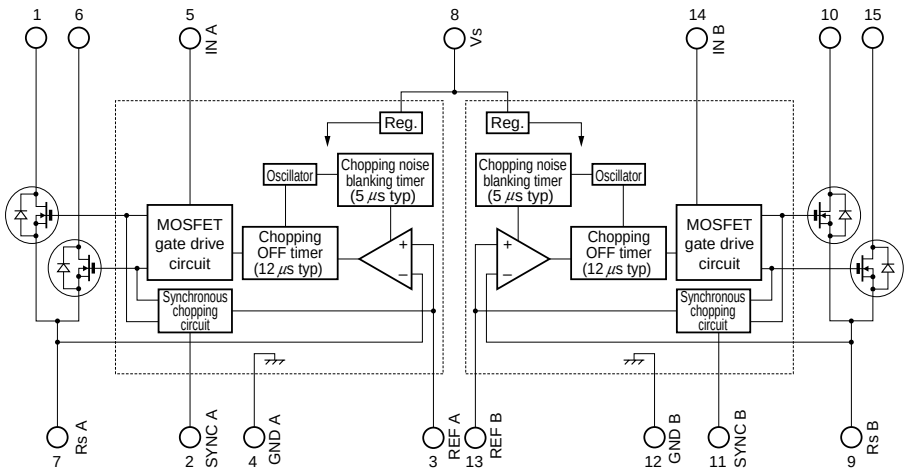

1, 6, 10, 15pin
Description of pins

	Excitation input signal	
	Active H	Active L
1pin	OUT A	OUT $\bar{A}$
6pin	OUT $\bar{A}$	OUT A
10pin	OUT B	OUT $\bar{B}$
15pin	OUT $\bar{B}$	OUT B

■Typical Connection Diagram (Recommended component values)

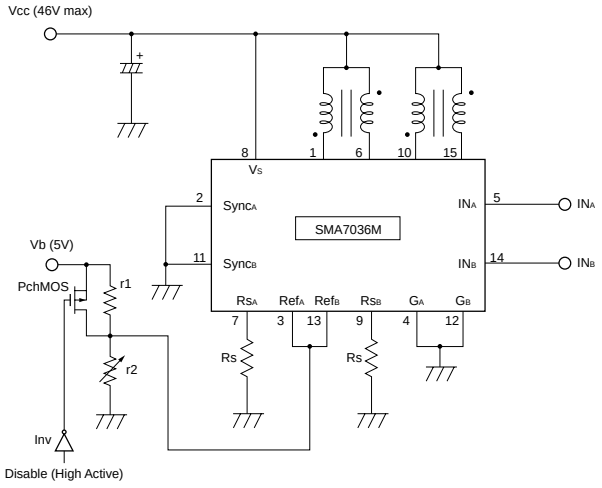

Excitation signal time chart
2-phase excitation

clock	0	1	2	3	0	1
IN_A	H	H	L	L	H	H
IN_B	L	H	H	L	L	H

r_1 : 8kΩ
r_2 : 2kΩ (VR)
R_S (1 to 2W) : 1Ω typ
PchMOS : HN1J02FU (Toshiba)
Inv : 7404

■External Dimensions (ZIP15 [SMA15Pin])

(Unit : mm)

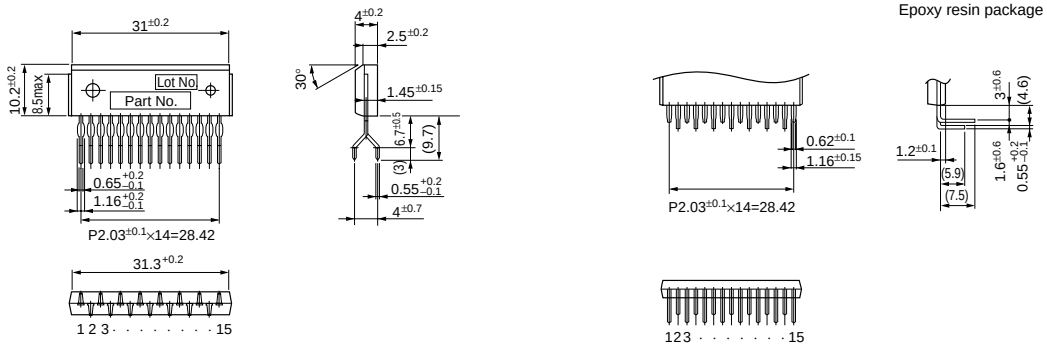

Forming No. No.1054

Forming No. No.1055

Product Mass : Approx.4g

SLA7027MU/SLA7024M/SLA7026M 2-Phase/1-2 Phase Excitation

■Absolute Maximum Ratings

(T_a=25°C)

Parameter	Symbol	Ratings			Unit
		SLA7027MU	SLA7024M	SLA7026M	
Motor Supply Voltage	V_{CC}	46			V
FET Drain-Source Voltage	V_{DSS}	100			V
Control Supply Voltage	V_S	46			V
Input Voltage	V_{IN}	7			V
Reference Voltage	V_{REF}	2			V
Output Current	I_O	1	1.5	3	A
Power Dissipation	P_{D1}	4.5 (Without Heatsink)			W
	P_{D2}	35 (T_C=25°C)			W
Channel Temperature	T_{ch}	+150			°C
Storage Temperature	T_{stg}	–40 to +150			°C

■Electrical Characteristics

	Parameter	Symbol	Ratings									Unit
			SLA7027MU			SLA7024M			SLA7026M			
			min.	typ.	max.	min.	typ.	max.	min.	typ.	max.	
DC characteristics	Control Supply Current	I_S		10	15		10	15		10	15	mA
		Condition	V_S=44V			V_S=44V			V_S=44V			
	Control Supply Voltage	V_S	10	24	44	10	24	44	10	24	44	V
	FET Drain-Source Voltage	V_{DSS}	100			100			100			V
		Condition	V_S=44V, I_{DSS}=250μA			V_S=44V, I_{DSS}=250μA			V_S=44V, I_{DSS}=250μA			
	FET ON Voltage	V_{DS}			0.85			0.6			0.85	V
		Condition	I_D=1A, V_S=14V			I_D=1A, V_S=14V			I_D=3A, V_S=14V			
	FET Drain Leakage Current	I_{DSS}			4			4			4	mA
		Condition	V_{DSS}=100V, V_S=44V			V_{DSS}=100V, V_S=44V			V_{DSS}=100V, V_S=44V			
	FET Diode Forward Voltage	V_{SD}			1.2			1.1			2.3	V
		Condition	I_D=1A			I_D=1A			I_D=3A			
	TTL Input Current	I_{IH}			40			40			40	μA
		Condition	V_{IH}=2.4V, V_S=44V			V_{IH}=2.4V, V_S=44V			V_{IH}=2.4V, V_S=44V			
		I_{IL}			–0.8			–0.8			–0.8	mA
		Condition	V_{IL}=0.4V, V_S=44V			V_{IL}=0.4V, V_S=44V			V_{IL}=0.4V, V_S=44V			
	TTL Input Voltage (Active High)	V_{IH}	2			2			2			V
		Condition	I_D=1A			I_D=1A			I_D=3A			
		V_{IL}			0.8			0.8			0.8	
		Condition	V_{DSS}=100V			V_{DSS}=100V			V_{DSS}=100V			
	TTL Input Voltage (Active Low)	V_{IH}	2			2			2			V
		Condition	V_{DSS}=100V			V_{DSS}=100V			V_{DSS}=100V			
		V_{IL}			0.8			0.8			0.8	
		Condition	I_D=1A			I_D=1A			I_D=3A			
AC characteristics	Switching Time	T_r		0.5			0.5			0.5		μs
		Condition	V_S=24V, I_D=0.8A			V_S=24V, I_D=1A			V_S=24V, I_D=1A			
		T_{stg}		0.7			0.7			0.7		
		Condition	V_S=24V, I_D=0.8A			V_S=24V, I_D=1A			V_S=24V, I_D=1A			
		T_f		0.1			0.1			0.1		
		Condition	V_S=24V, I_D=0.8A			V_S=24V, I_D=1A			V_S=24V, I_D=1A			

■Internal Block Diagram

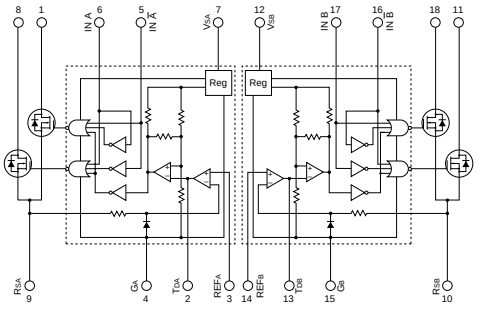

1, 8, 11, 18pin
Description of pins

	Excitation input signal	
	Active H	Active L
Pin 1	OUT_A	$OUT_{\bar{A}}$
Pin 8	$OUT_{\bar{A}}$	OUT_A
Pin 11	OUT_B	$OUT_{\bar{B}}$
Pin 18	$OUT_{\bar{B}}$	OUT_B

■Typical Connection Diagram (Recommended component values)

Active High

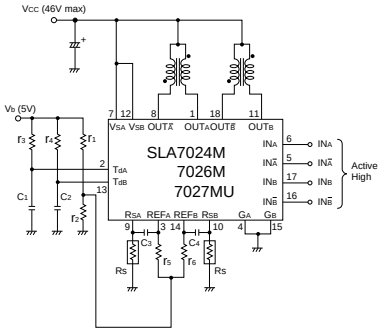

Excitation signal time chart
2-phase excitation

clock	0	1	2	3	0	1
IN_A	H	L	L	H	H	L
$IN_{\bar{A}}$	L	H	H	L	L	H
IN_B	H	H	L	L	H	H
$IN_{\bar{B}}$	L	L	H	H	L	L

1-2 phase excitation

clock	0	1	2	3	4	5	6	7	0	1	2	3
IN_A	H	H	L	L	L	L	L	H	H	H	L	L
$IN_{\bar{A}}$	L	L	L	H	H	H	L	L	L	L	L	H
IN_B	L	H	H	H	L	L	L	L	L	H	H	H
$IN_{\bar{B}}$	L	L	L	L	L	H	H	H	L	L	L	L

r_1 : 510Ω
r_2 : 100Ω (VR)
r_3 : 47kΩ
r_4 : 47kΩ
r_5 : 2.4kΩ
r_6 : 2.4kΩ
C_1 : 470pF
C_2 : 470pF
C_3 : 2200pF
C_4 : 2200pF
R_S : 1Ω typ (7024M)
(1 to 2W) 0.68Ω typ (7026M)
1.8Ω typ (7027MU)

Active Low

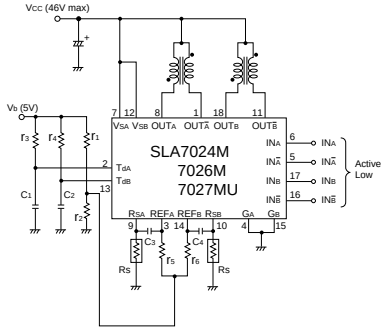

Excitation signal time chart
2-phase excitation

clock	0	1	2	3	0	1
IN_A	L	H	H	L	L	H
$IN_{\bar{A}}$	H	L	L	H	H	L
IN_B	L	L	H	H	L	L
$IN_{\bar{B}}$	H	H	L	L	H	H

1-2 phase excitation

clock	0	1	2	3	4	5	6	7	0	1	2	3
IN_A	L	L	H	H	H	H	H	L	L	L	H	H
$IN_{\bar{A}}$	H	H	H	L	L	L	H	H	H	H	H	L
IN_B	H	L	L	L	H	H	H	H	H	L	L	L
$IN_{\bar{B}}$	H	H	H	H	H	L	L	L	H	H	H	H

r_1 : 510Ω
r_2 : 100Ω (VR)
r_3 : 47kΩ
r_4 : 47kΩ
r_5 : 2.4kΩ
r_6 : 2.4kΩ
C_1 : 470pF
C_2 : 470pF
C_3 : 2200pF
C_4 : 2200pF
R_S : 1Ω typ (7024M)
(1 to 2W) 0.68Ω typ (7026M)
1.8Ω typ (7027MU)

■External Dimensions (ZIP18 with Fin [SLA18Pin])

(Unit : mm)

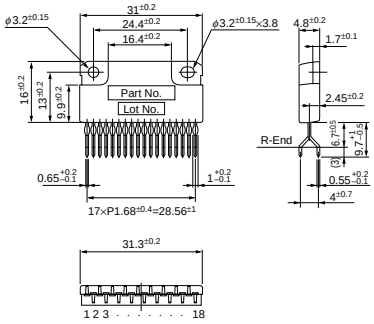

Forming No. No.871

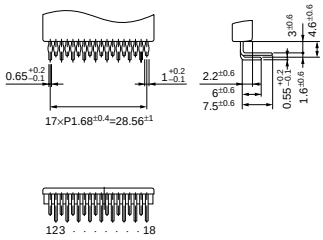

Forming No. No.872

Product Mass : Approx.6g

SLA7031M/SLA7032M/SLA7033M 2-Phase/1-2 Phase Excitation

■Absolute Maximum Ratings

(T_a=25°C)

Parameter	Symbol	Ratings			Unit
		SLA7031M	SLA7032M	SLA7033M	
Motor Supply Voltage	V_{CC}	46			V
Control Supply Voltage	V_S	46			V
FET Drain-Source Voltage	V_{DSS}	100			V
Input Voltage	V_{IN}	–0.3 to +7			V
	V_{SYNC}	–0.3 to +7			
Reference Voltage	V_{REF}	–0.3 to +7			V
Sense Voltage	V_{RS}	–5 to +7			V
Output Current	I_O	1	1.5	3	A
Power Dissipation	P_{D1}	4.5(Without Heatsink)			W
	P_{D2}	35(T_c=25°C)			W
Channel Temperature	T_{ch}	+150			°C
Operating Ambient Temperature	T_a	–20 to+85			°C
Storage Temperature	T_{stg}	–40 to +150			°C

■Recommended Operating Conditions

Parameter	Symbol	Ratings		Unit	Remarks
		min.	max.		
Motor Supply Voltage	V_M		44	V	
Control Supply Voltage	V_S	10	44	V	
REF Input Voltage	V_{REF}	0.1	1.0	V	The control current precision is degraded at 0.1V or lower.
	$V_{REF(dis)}$	4.0	5.5	V	Output MOS FET OFF
Case Temperature	T_C		100	°C	Temperature of 4(15)-Pin Lead(without heatsink)

■Electrical Characteristics

	Parameter		Symbol	Ratings									Unit
				SLA7031M			SLA7032M			SLA7033M			
				min.	typ.	max.	min.	typ.	max.	min.	typ.	max.	
DC characteristics	Control Supply Current		I_S		10	15		10	15		10	15	mA
			Condition	V_S=44V			V_S=44V			V_S=44V			
	Control Supply Voltage		V_S	10	24	44	10	24	44	10	24	44	V
	FET Drain-Source Voltage		V_{DSS}	100			100			100			V
			Condition	V_S=44V, I_{DSS}=250μA			V_S=44V, I_{DSS}=250μA			V_S=44V, I_{DSS}=250μA			
	FET ON Voltage		V_{DS}			0.85			0.6			0.85	V
			Condition	I_D=1A, V_S=10V			I_D=1A, V_S=14V			I_D=3A, V_S=14V			
	FET Diode Forward Voltage		V_{SD}			1.2			1.1			2.3	V
			Condition	I_{SD}=1A			I_{SD}=1A			I_{SD}=3A			
	FET Drain Leakage Current		I_{DSS}			250			250			250	μA
			Condition	V_{DSS}=100V, V_S=44V			V_{DSS}=100V, V_S=44V			V_{DSS}=100V, V_S=44V			
	IN Terminal	Input Voltage (Active High)	V_{IH}	2.0			2.0			2.0			V
			Condition	I_D=1A			I_D=1A			I_D=3A			
			V_{IL}			0.8			0.8			0.8	
			Condition	V_{DSS}=100V			V_{DSS}=100V			V_{DSS}=100V			
		Input Voltage (Active Low)	V_{IH}	2.0			2.0			2.0			V
			Condition	V_{DSS}=100V			V_{DSS}=100V			V_{DSS}=100V			
			V_{IL}			0.8			0.8			0.8	
			Condition	I_D=1A			I_D=1A			I_D=3A			
		Input Current	I_I			±1			±1			±1	μA
			Condition	V_S=44V, V_I=0 or 5V			V_S=44V, V_I=0 or 5V			V_S=44V, V_I=0 or 5V			
	SYNC Terminal	Input Voltage	V_{SYNC}	4.0			4.0			4.0			V
			Condition	Synchronous chopping mode			Synchronous chopping mode			Synchronous chopping mode			
			V_{SYNC}			0.8			0.8			0.8	
			Condition	Asynchronous chopping mode			Asynchronous chopping mode			Asynchronous chopping mode			
		Input Current	I_{SYNC}			0.1			0.1			0.1	mA
			Condition	V_S=44V, V_{SYNC}=5V			V_S=44V, V_{SYNC}=5V			V_S=44V, V_{SYNC}=5V			
			I_{SYNC}			–0.1			–0.1			–0.1	
			Condition	V_S=44V, V_{SYNC}=0V			V_S=44V, V_{SYNC}=0V			V_S=44V, V_{SYNC}=0V			
	REF Terminal	Input Current	V_{REF}	0		2.0	0		2.0	0		2.0	V
			Condition	Reference Voltage input			Reference Voltage input			Reference Voltage input			
			V_{REF}	4.0		5.5	4.0		5.5	4.0		5.5	
			Condition	Output FET OFF			Output FET OFF			Output FET OFF			
		Input Current	I_{REF}			±1			±1			±1	μA
			Condition	No synchronous trigger			No synchronous trigger			No synchronous trigger			
		Internal Resistance	R_{REF}		40			40			40		Ω
			Condition	Resistance between GND and REF terminal at synchronous trigger			Resistance between GND and REF terminal at synchronous trigger			Resistance between GND and REF terminal at synchronous trigger			
	Sense Voltage		VR_S		V_{REF}			V_{REF}			V_{REF}		V
AC characteristics	Switching Time		T_r		0.5			0.5			0.5		μs
			T_{stg}		0.7			0.7			0.7		
			T_f		0.1			0.1			0.1		
			Condition	V_S=24V, I_D=0.8A			V_S=24V, I_D=1A			V_S=24V, I_D=1A			
	Chopping OFF Time		T_{OFF}		12			12			12		μs
			Condition	V_S=24V			V_S=24V			V_S=24V			

■Internal Block Diagram

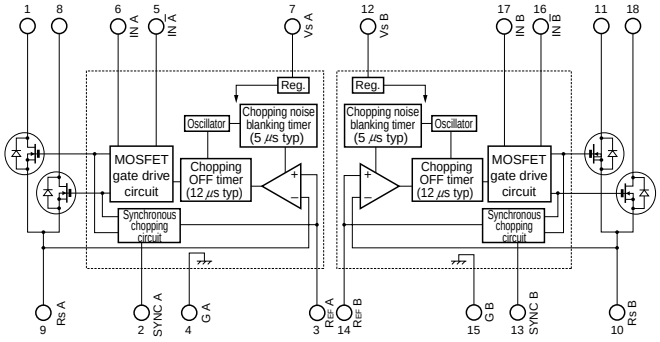

1,8,11,18pin
Description of pins

	Excitation input signal	
	Active H	Active L
1pin	OUT A	OUT Ā
8pin	OUT Ā	OUT A
11pin	OUT B	OUT B̄
18pin	OUT B̄	OUT B

■Typical Connection Diagram (Recommended component values)

Active High

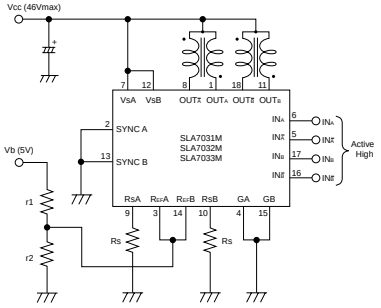

Excitation signal time chart
2-phase excitation

clock	0	1	2	3	0	1
IN_A	H	L	L	H	H	L
$IN_{\bar{A}}$	L	H	H	L	L	H
IN_B	H	H	L	L	H	H
$IN_{\bar{B}}$	L	L	H	H	L	L

1-2 phase excitation

clock	0	1	2	3	4	5	6	7	0	1	2	3
IN_A	H	H	L	L	L	L	L	H	H	H	L	L
$IN_{\bar{A}}$	L	L	L	H	H	H	L	L	L	L	L	H
IN_B	L	H	H	H	L	L	L	L	L	H	H	H
$IN_{\bar{B}}$	L	L	L	L	L	H	H	H	L	L	L	L

r_1 : 4kΩ
r_2 : 1kΩ (VR)
R_S : 1Ω typ (7031M/7032M)
(1 to 2W) 0.68Ω typ (7033M)

Active Low

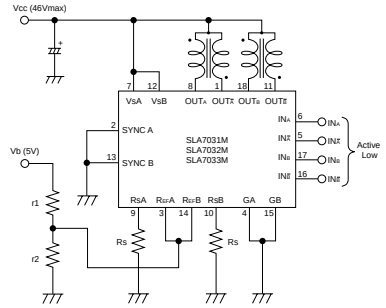

Excitation signal time chart
2-phase excitation

clock	0	1	2	3	0	1
IN_A	L	H	H	L	L	H
$IN_{\bar{A}}$	H	L	L	H	H	L
IN_B	L	L	H	H	L	L
$IN_{\bar{B}}$	H	H	L	L	H	H

1-2 phase excitation

clock	0	1	2	3	4	5	6	7	0	1	2	3
IN_A	L	L	H	H	H	H	H	L	L	L	H	H
$IN_{\bar{A}}$	H	H	H	L	L	L	H	H	H	H	H	L
IN_B	H	L	L	L	H	H	H	H	H	L	L	L
$IN_{\bar{B}}$	H	H	H	H	H	L	L	L	H	H	H	H

r_1 : 4kΩ
r_2 : 1kΩ (VR)
R_S : 1Ω typ (7031M/7032M)
(1 to 2W) 0.68Ω typ (7033M)

■External Dimensions (ZIP18 with Fin [SLA18Pin])

(Unit : mm)

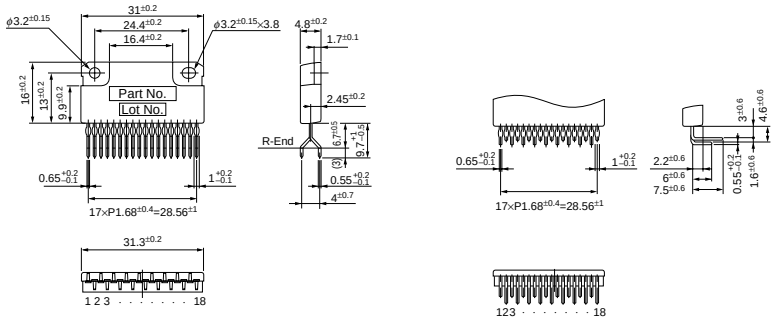

Forming No. No.871

Forming No. No.872

Product Mass : Approx.6g

SLA7050M/SLA7051M/SLA7052M 2-Phase/1-2 Phase Excitation, Built-in Sequencer

■Absolute Maximum Ratings

(T_a=25°C)

Parameter	Symbol	Ratings			Unit
		SLA7050M	SLA7051M	SLA7052M	
Motor Supply Voltage	V_M	46			V
Load Supply Voltage	V_S	46			V
Logic Supply Voltage	V_{CC}	6			V
Output Current	I_O	1	2	3	A
Logic Input Voltage	V_{IN}	–0.3 to V_{CC}+0.3			V
REF Input Voltage	V_{REF}	–0.3 to V_{CC}+0.3			V
Sense Voltage	V_{RS}	–2 to +2			V
Power Dissipation	P_{D1}	4 (Without Heatsink)			W
	P_{D2}	20 (T_C=25°C)			W
Junction Temperature	T_j	+150			°C
Operating Ambient Temperature	T_a	–20 to +85			°C
Storage Temperature	T_{stg}	–30 to +150			°C

■Recommended Operating Conditions

Parameter	Symbol	Ratings		Unit	Remarks
		min.	max.		
Motor Supply Voltage	V_M		44	V	
Load Supply Voltage	V_S	10	44	V	
Logic Supply Voltage	V_{CC}	3.0	5.5	V	The V_{CC} surge voltage should be 0.5V or lower.
REF Input Voltage	V_{REF}	0.1	1.0	V	The control current precision is degraded at 0.1V or lower.
Case Temperature	T_C		100	°C	Temperature at pin-10 Lead (Without heatsink)

■Electrical Characteristics

(V_{CC} = 5V, V_S = 24V, T_a = 25°C, unless otherwise specified)

Parameter	Symbol	Ratings									Unit
		SLA7050M			SLA7051M			SLA7052M			
		min.	typ.	max.	min.	typ.	max.	min.	typ.	max.	
Main Supply Current	I_{SS}			15			15			15	mA
	Conditions	Normal operation			Normal operation			Normal operation			
	I_S			100			100			100	μA
	Conditions	Sleep mode			Sleep mode			Sleep mode			
Logic Supply Current	I_{CC}			3			3			3	mA
Output MOSFET Breakdown Voltage	V_{DSS}	100			100			100			V
	Conditions	V_S=44V, I_{DSS}=1mA			V_S=44V, I_{DSS}=1mA			V_S=44V, I_{DSS}=1mA			
Output MOSFET ON Resistance	$R_{DS\ (ON)}$			0.85			0.5			0.27	Ω
	Conditions	I_D=1A			I_D=1A			I_D=3A			
Output MOSFET Diode Forward Voltage	V_{SD}			1.2			1.1			2.3	V
	Conditions	I_{SD}=1A			I_{SD}=1A			I_{SD}=3A			
Maximum Clock Frequency	F_{clock}			100			100			100	kHz
Logic Input Voltage	V_{IL}			V_{CC}·0.25			V_{CC}·0.25			V_{CC}·0.25	V
	V_{IH}	V_{CC}·0.75			V_{CC}·0.75			V_{CC}·0.75			
Logic Input Current	I_{IL}		±1			±1			±1		μA
	I_{IH}		±1			±1			±1		
REF Input Voltage	V_{REF}	0		1.5	0		1.5	0		1.5	V
	Conditions	Normal-operation current control			Normal-operation current control			Normal-operation current control			
	V_{REFS}	2		V_{CC}	2		V_{CC}	2		V_{CC}	
	Conditions	Output OFF (sleep)			Output OFF (sleep)			Output OFF (sleep)			
REF Input Current	I_{REF}		±10			±10			±10		μA
Sense Voltage	V_{RS}		V_{REF}			V_{REF}			V_{REF}		V
PWM OFF Time	T_{OFF}		12			12			12		μS
PWM Minimum ON Time	$T_{ON\ (min)}$		5			5			5		μS
Sleep - Enable Recovery Time	T_{SE}	100			100			100			
	Conditions	V_{REF} : 2.0→1.5V, I_O : 0.75A			V_{REF} : 2.0→1.5V, I_O : 1.5A			V_{REF} : 2.0→1.5V, I_O : 2.0A			μS
Switching Time	T_{ONC}		2.5			2.5			2.5		μS
	Conditions	Clock→Out			Clock→Out			Clock→Out			
	T_{OFFC}		2.0			2.0			2.0		
	Conditions	Clock→Out			Clock→Out			Clock→Out			

■Internal Block Diagram and Pin Assignment

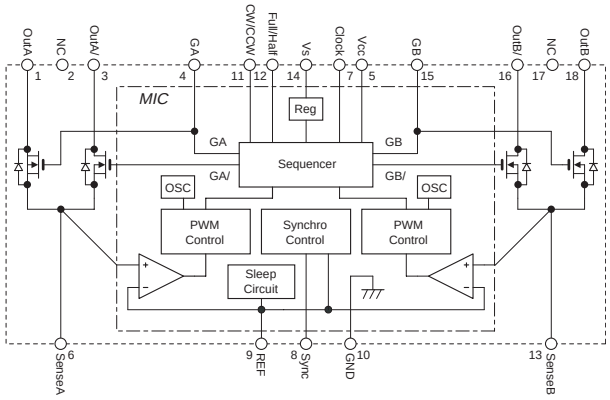

Pin No.	Symbol	Function
1	OutA	Phase A output
2	NC	No Connection
3	OutA/	Phase $\overline{A}$ output
4	GA	No Connection
5	V_{CC}	Logic supply
6	SenseA	Phase A current sense
7	Clock	Step Clock input
8	Sync	Synchronous PWM control signal input
9	Ref	Control current setting & output OFF
10	GND	Device GND
11	CW/CCW	Normal/reverse control input
12	Full/Half	Full/Half Step control input
13	SenseB	Phase B current sense
14	V_S	Load supply (motor supply)
15	GB	No Connection
16	OutB/	Phase $\overline{B}$ output
17	NC	No Connection
18	OutB	Phase B output

Truth Table

	L	H
CW/CCW	CW	CCW
Full/Half	Full	Half
REF	Enable	Disable
Sync	Asynchronous	Synchronous
Clock		

* REF terminal turns into normal operation at VREF < 1.5V.
The output is disabled (Output OFF) at VREF > 2V.

■Typical Connection Diagram

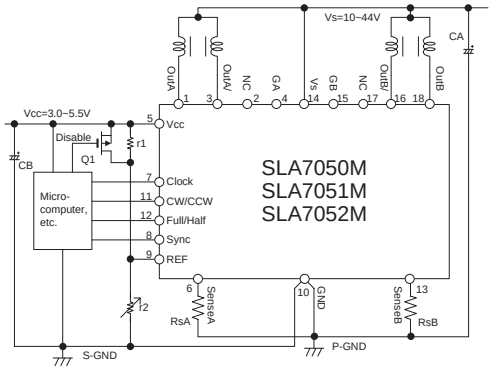

Rs=0.1 to 2Ω (Power dissipation should be: $P \fallingdotseq Io^2 \times Rs$)
R1=10kΩ CA=100μF/50V
R2=5.1kΩ (VR) CB=10μF/10V
Q1:T.B.D

* V_{CC} line noise precaution:
The device may malfunction if the V_{CC} line noise exceeds 0.5V.
* Be sure to connect the unused logic input terminals (CW/CCW, F/H, Sync) to V_{CC} or GND. If they are open, the device will malfunction.
* GND pattern precaution:
Separating the V_{CC} system GND (S-GND) and V_S system GND (P-GND) from the device GND (10-Pin) helps to reduce noise.

■External Dimensions (ZIP18 with Fin [SLA18Pin])

(Unit : mm)

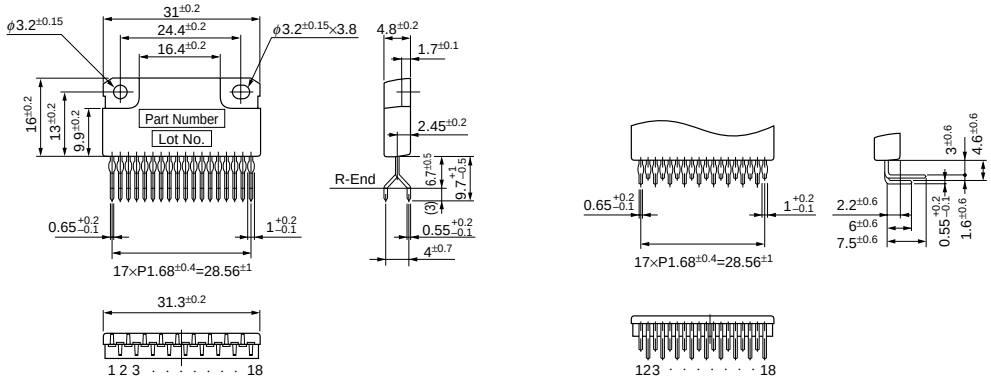

Forming No. No.871 Forming No. No.872

Product Mass : Approx.6g

SLA7070MR, MPR/7071MR, MPR/7072MR, MPR/7073MR, MPR 2-Phase/1-2 Phase Excitation Support, Built-in Sequencer

■Features

- Lineup of built-in current sense resistor and built-in protection circuit-type
- Power supply voltages, V_{BB}: 46 V (max), 10 to 44 V normal operating range
- Logic supply voltages, V_{DD}: 3.0 to 5.5 V
- Maximum output currents: 1 A, 1.5 A, 2 A, and 3 A
- Built-in sequencer
- Self-excitation PWM current control with fixed off-time
- Synchronous PWM chopping function prevents motor noise in Hold mode
- Sleep mode for reducing the IC input current in stand-by state
- ZIP type 23-pin molded package (SLA package)

■Absolute Maximum Ratings

Parameter	Symbol	Ratings	Unit	Remarks
Motor Supply Voltage	V_M	46	V	
Driver Supply Voltage	V_{BB}	46	V	
Logic Supply Voltage	V_{DD}	6	V	
Output Current	Io	*1	A	Mode F
Logic Input Voltage	V_{IN}	–0.3 to V_{DD}+0.3	V	
REF Input Voltage	V_{REF}	–0.3 to V_{DD}+0.3	V	
Sense Voltage	V_{RS}	±2	V	Excluding tw<1µs
Power Dissipation	PD	4.7	W	When T_a = 25°C
		17		When T_c = 25°C
Junction Temperature	T_j	+150	°C	
Operating Ambient Temperature	T_a	–20 to +85	°C	
Storage Temperature	T_{stg}	–30 to +150	°C	

*1: Output current value may be limited for the SLA7070MR, MPR (1.0 A), SLA7071MR, MPR (1.5 A), SLA7072MR, MPR (2.0 A), and SA7073MR, MPR (3.0 A), depending on the duty ratio, ambient temperature, and heating conditions. Be sure that junction temperature of T_j is not exceeded under any circumstances.

■Recommended Operating Conditions

Parameter	Symbol	Rating min.	Rating max.	Unit	Remarks
Motor Supply Voltage	V_M		44	V	
Driver Supply Voltage	V_S	10	44	V	
Logic Supply Voltage	V_{CC}	3.0	5.5	V	The V_{CC} surge voltage should be 0.5 V or lower
Case Temperature	T_C		90	°C	Temperature at Pin-12 Lead (without heatsink)

■Electrical Characteristics

Parameter	Symbol	Ratings min.	Ratings typ.	Ratings max.	Unit	Conditions
Main Supply Current	I_{BB}			15	mA	In operation
	I_{BBS}			100	µA	Sleep 1 and Sleep 2 modes
Logic Supply Current	Icc			5	mA	
Output MOSFET Breakdown Voltage	$V_{(BR)DSS}$	100			V	VBB=44V, ID=1mA
Output MOSFET ON Resistance	$R_{DS(ON)}$		0.7	0.85	Ω	SLA7070M, ID=1.0A
			0.45	0.6		SLA7071M, ID=1.5A
			0.25	0.4		SLA7072M, ID=2.0A
			0.18	0.24		SLA7073M, ID=3.0A
Output MOSFET Diode Forward Voltage	V_F		0.85	1.1	V	SLA7070M, ID=1.0A
			1.0	1.25		SLA7071M, ID=1.5A
			0.95	1.2		SLA7072M, ID=2.0A
			0.95	2.1		SLA7073M, ID=3.0A
Maximum Clock Frequency	Fclock	250			kHz	When Clock Duty = 50%
Logic Input Voltage	V_{IL}			0.25VDD	V	
	V_{IH}	0.75VDD				
Logic Input Current	I_{IL}		±1		µA	
	I_{IH}		±1			
REF Input Voltage	V_{REF}	0.04		0.3	V	SLA7070MR/7070MPR, within the current setting range
		0.04		0.45		SLA7071MR/7071MPR, within the current setting range
		0.04		0.4		SLA7072MR/7072MPR, within the current setting range
		0.04		0.45		SLA7073MR/7073MPR, within the current setting range
	V_{REFS}	2		VDD		Output (OFF) Sleep 1
REF Input Current	I_{REF}		±10		µA	
Sense Voltage	V_{SENSE}		VREF		V	When step reference current ratio is 100%
Sleep-Enable Recovery Time	T_{SE}	100			µS	Sleep1&Sleep2
Switching Time	t_{con}		2.0		µS	Clock → Out ON
	t_{coff}		1.5		µS	Clock → Out OFF
Sense Resistance	R_S	0.296	0.305	0.314	Ω	SLA7070MR/7070MPR, tolerance of ±3%
		0.296	0.305	0.314		SLA7071MR/7071MPR, tolerance of ±3%
		0.199	0.205	0.211		SLA7072MR/7072MPR, tolerance of ±3%
		0.150	0.155	0.160		SLA7073MR/7073MPR, tolerance of ±3%
Overcurrent Sense Voltage	Vocp	0.65	0.7	0.75	V	SLA7070MPR/7071MPR/7072MPR/7073MPR, when motor coil shorts out
Overcurrent Sense Current	Iocp		2.3		A	SLA7070MPR/7071MPR
			3.5			SLA7072MPR
			4.6			SLA7073MPR
Flag Output Voltage	V_{FlagL}			1.25	V	SLA7070MPR/7071MPR/7072MPR/7073MPR, IFlagL=1.25mA
	V_{FlagH}	1.25–VDD				SLA7070MPR/7071MPR/7072MPR/7073MPR, IFlagH=–1.25mA
Flag Output Current	I_{FlagL}			1.25	mA	SLA7070MPR/7071MPR/7072MPR/7073MPR
	I_{FlagH}	–1.25				
Step Reference Current Ratio	ModeF		100		%	
	Mode8		70.7		%	
PWM Minimum ON Time	ton(min)		3.2		µs	
PWM OFF Time	toff		12		µs	

The direction in which current flows out of the device is regarded as negative.

■Internal Block Diagram

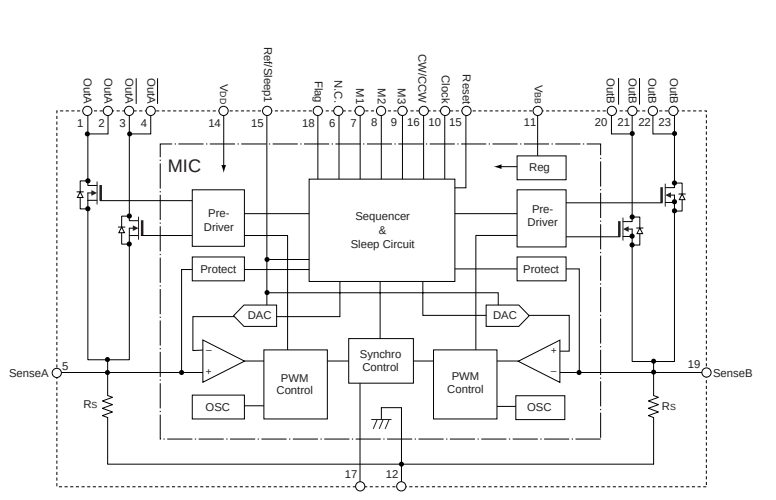

The protect circuit is deleted and the flag pin is N.C. for SLA7070MR, 7071MR, 7072MR, and 7073MR.

■Pin Assignment

Pin No.	Symbol	Function
1	OutA	Phase A output
2		
3	OutA/	Phase $\overline{A}$ output
4		
5	SenseA	Phase A current sense
6	N.C.	N.C.
7	M1	Excitation mode/Sleep 2 setting input
8	M2	
9	M3	
10	Clock	Step Clock input
11	V_{BB}	Driver supply (motor supply)
12	Gnd	Device GND
13	Ref/Sleep1	Control current mode/Sleep 1 setting input
14	V_{DD}	Logic supply
15	Reset	Internal logic reset input
16	CW/CCW	Normal/reverse control input
17	Sync	PWM control signal input
18	Flag	Protection circuit monitor output*1
19	SenseB	Phase B current sense
20	OutB/	Phase $\overline{B}$ current output
21		
22	OutB	Phase B current output
23		

*1: N.C. pin for SLA7070MR, 7071MR, 7072MR, and 7073MR.

■Typical Connection Diagram

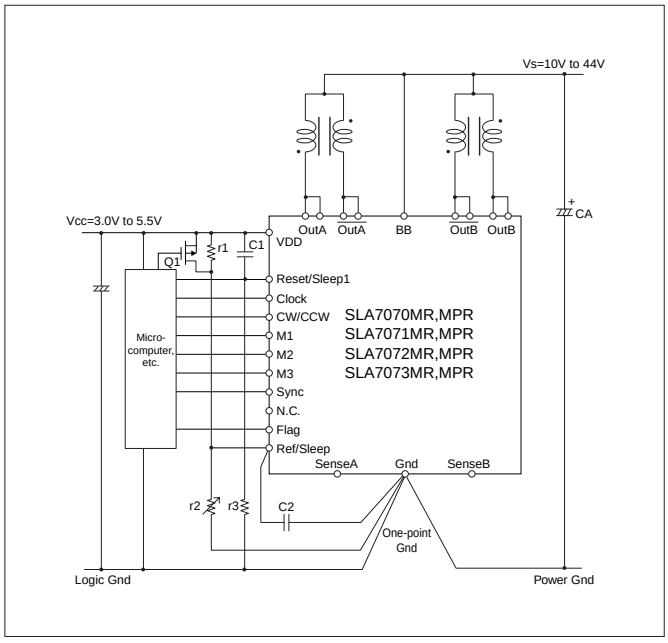

* There is no Flag pin (Pin-18) for SLA7070MR, 7071MR, 7072MR, and 7073MR.

■External Dimensions (ZIP23 with Fin[SLA23Pin])

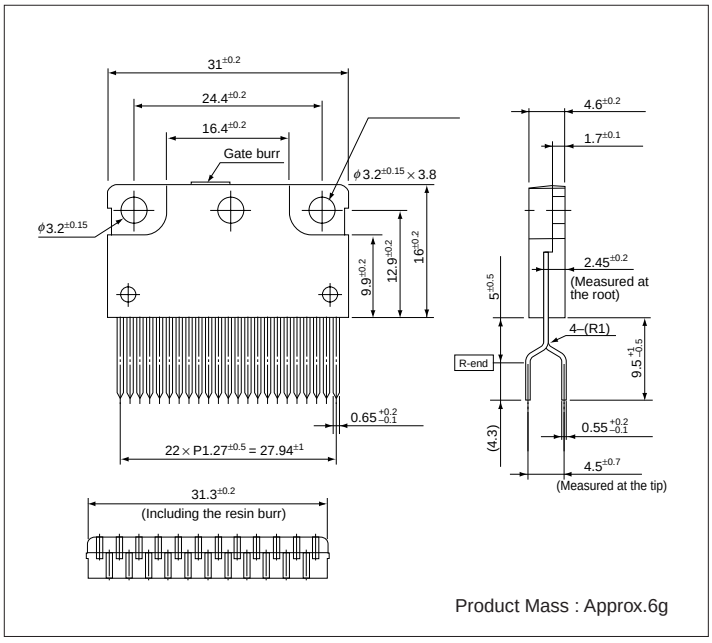

Product Mass : Approx.6g

SLA7080MR, MPR/7081MR, MPR/7082MR, MPR/7083MR, MPR 2-Phase/1-2-Phase Excitation

■Features

- Lineup of built-in current sense resistor and built-in protection circuit-type
- Power supply voltages, VBB: 46 V (max), 10 to 44 V normal operating range
- Logic supply voltages, VDD: 3.0 to 5.5 V
- Maximum output current Io: 1A, 1.5A, 2A, and 3A
- Self-excitation PWM current control with fixed off time
- Synchronous PWM chopping function prevents motor noise in Hold mode
- Sleep mode for reducing the IC input current in stand-by state
- ZIP type 23-pin molded package (SLA package)

■Absolute Maximum Ratings

(T_a=25°C)

Parameter	Symbol	Ratings	Unit	Conditions
Motor Supply Voltage	V_M	46	V	
Driver Supply Voltage	V_{BB}	46	V	
Logic Supply Voltage	V_{DD}	6	V	
Output Current	Io	*1	A	
Logic Input Voltage	V_{IN}	–0.3 to V_{DD}+0.3	V	
REF Input Voltage	V_{REF}	–0.3 to V_{DD}+0.3	V	
Sense Voltage	V_{RS}	±2	V	Excluding tw<1μs
Power Dissipation	P_D	4.7	W	When Ta = 25°C
		17		When Tc = 25°C
Junction Temperature	Tj	+150	°C	
Operating Ambient Temperature	Ta	–20 to +85	°C	
Storage Temperature	Tstg	–30 to +150	°C	

*1: Output current value may be limited for the SLA7080MR, MPR (1.0A), SLA7081MR, MPR (1.5A), SLA7082MR, MPR (2.0A), SLA7083MR, MPR (3.0A), depending on the duty ratio, ambient temperature, and heating conditions.
Do not exceed junction temperature of Tj under any circumstances.

■Recommended Operating Conditions

Parameter	Symbol	Ratings min.	Ratings max.	Unit	Conditions
Motor Supply Voltage	V_M		44	V	
Driver Supply Voltage	V_{BB}	10	44	V	
Logic Supply Voltage	V_{DD}	3.0	5.5	V	The V_{DD} surge voltage should be 0.5V or lower.
REF Input Voltage	V_{REF}	0.04	0.3	V	When controlling the current for SLA7080M
			0.45		When controlling the current for SLA7081M/SLA7083M
			0.4		When controlling the current for SLA7082M
Case Temperature	Tc		90	°C	Rear center (without Fin)

■Electrical Characteristics

(V_{DD}=5V, V_{BB}=24V, T_a=25°C, unless otherwise specified)

Parameter	Symbol	Ratings min.	Ratings typ.	Ratings max.	Unit	Conditions
Main Supply Current	I_{BB}			15	mA	In operation
	I_{BBS}			100	μA	Sleep Mode
Logic Supply Current	I_{DD}			5	mA	
Output MOSFET Breakdown Voltage	$V_{(BR)DSS}$	100			V	V_{BB}=44V, I_D=1mA
Output MOSFET ON Resistance	$R_{DS(ON)}$		0.7	0.85	Ω	SLA7080M, I_D=1.0A
			0.45	0.6		SLA7081M, I_D=1.5A
			0.25	0.4		SLA7082M, I_D=2.0A
			0.18	0.24		SLA7083M, I_D=3.0A
Output MOSFET Diode Forward Voltage	V_F		0.85	1.1	V	SLA7080M, I_D=1.0A
			1.0	1.25		SLA7081M, I_D=1.5A
			0.95	1.2		SLA7082M, I_D=2.0A
			0.95	2.1		SLA7083M, I_D=3.0A
Maximum Clock Frequency	Fclk	250			kHz	When Duty = 50%
Logic Input Voltage	V_{IL}			0.25V_{DD}	V	
	V_{IH}	0.75V_{DD}				
Logic Input Current	I_{IL}		±1		μA	
	I_{IH}		±1			
REF Input Voltage	V_{REF}	0.04		0.3	V	SLA7080M
		0.04		0.45		SLA7081M
		0.04		0.4		SLA7082M
		0.04		0.45		SLA7083M
	V_{REFS}	2.0		V_{DD}		Sleep ("I_{BBS}", "output: OFF")
REF Input Current	I_{REF}		±10		μA	
Sense Voltage	V_{SENSE}	V_{REF}–0.03	V_{REF}	V_{REF}+0.03	V	
Sense Resistance	Rs	0.296	0.305	0.314	Ω	Including the resistance due to the product configuration (about 5 mΩ) for SLA7080M
		0.296	0.305	0.314		Including the resistance due to the product configuration (about 5 mΩ) for SLA7081M
		0.199	0.205	0.211		Including the resistance due to the product configuration (about 5 mΩ) for SLA7082M
		0.150	0.155	0.160		Including the resistance due to the product configuration (about 5 mΩ) for SLA7083M
PWM Minimum ON Time (blanking time)	ton(min)		3.2		μs	B_SEL: Low
			5.2			B_SEL: High
PWM OFF Time	toff		13		μs	
Sleep-Enable Recovery Time	T_{SE}	100			μS	Sleep
Switching Time	tcon		1.5		μS	Phase IN → Out ON
	tcoff		1.0		μS	Phase IN → Out OFF
Overcurrent Sense Voltage	Vocp	0.65	0.7	0.75	V	SLA7080MPR/7081MPR/7082MPR/7083MPR, when the motor coil shorts out
Overcurrent Sense Current Vocp÷Rs	Iocp		2.3		A	SLA7080MPR/7081MPR
			3.5			SLA7082MPR
			4.5			SLA7083MPR
Time Not Sensing Load Disconnection	topp	1.5	2.0	2.5	μS	SLA7080MPR/7081MPR/7082MPR/7083MPR
Thermal Protection Temperature	T_{tsd}		140		°C	SLA7080MPR/7081MPR/7082MPR/7083MPR, rear of case (at the saturation temperature)
Flag Output Voltage	V_{FlagL}			1.25	V	SLA7080MPR/7081MPR/7082MPR/7083MPR, IFlagL= 1.25mA
	V_{FlagH}	1.25V_{DD}				SLA7080MPR/7081MPR/7082MPR/7083MPR, IFlagH= –1.25mA
Flag Output Current	I_{FlagL}			1.25	mA	SLA7080MPR/7081MPR/7082MPR/7083MPR
	I_{FlagH}	–1.25				

*The direction in which current flows out of the device is regarded as negative.

■Internal Block Diagram

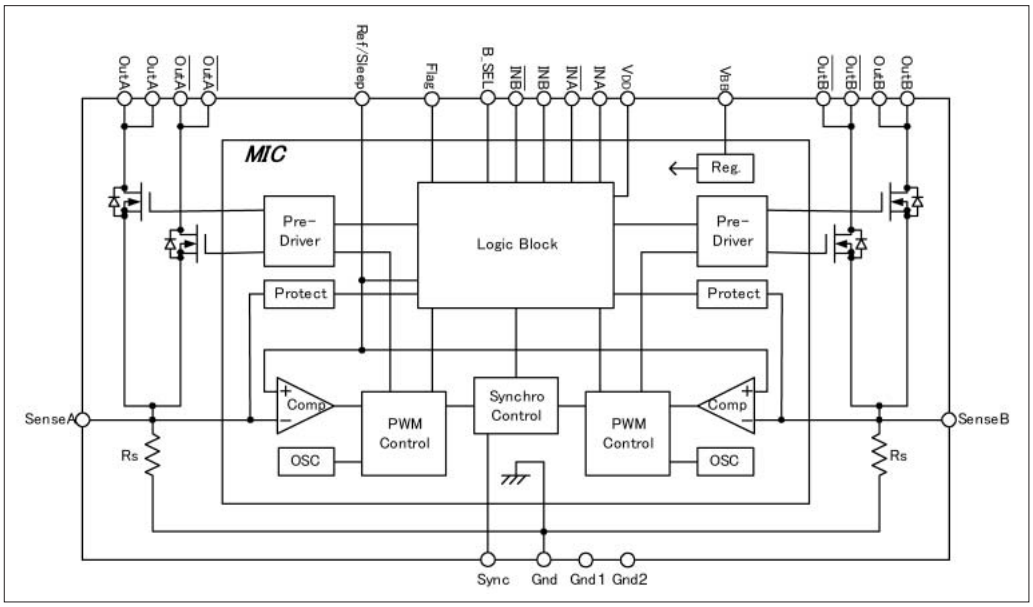

* The protect circuit is deleted and the flag pin is N.C. for SLA7080MR, 7081MR, 7082MR, and 7083MR.

■Pin Assignment

Pin No.	Symbol	Function
1	Out A	Phase A output
2		
3	/Out A	Phase $\overline{A}$ output
4		
5	Sense A	Phase A current sense
6	B_SEL	Blanking time switching input
7	INA	Phase A switching input
8	/INA	
9	INB	Phase B switching input
10	/INB	
11	VBB	Driver supply (motor supply)
12	Gnd	Device GND
13	Ref/Sleep	Control current mode/Sleep setting input
14	VDD	Logic supply
15	Gnd1	Gnd1
16	Gnd2	Gnd2
17	Sync	PWM synchronous/asynchronous switching input
18	Flag*1	Protection circuit monitor output*1
19	Sense B	Phase B current sense
20	/Out B	Phase $\overline{B}$ output
21		
22	Out B	Phase B output
23		

*1: N.C. pin for SLA7080MR, 7081MR, 7082MR, and 7083MR.

■Typical Connection Diagram

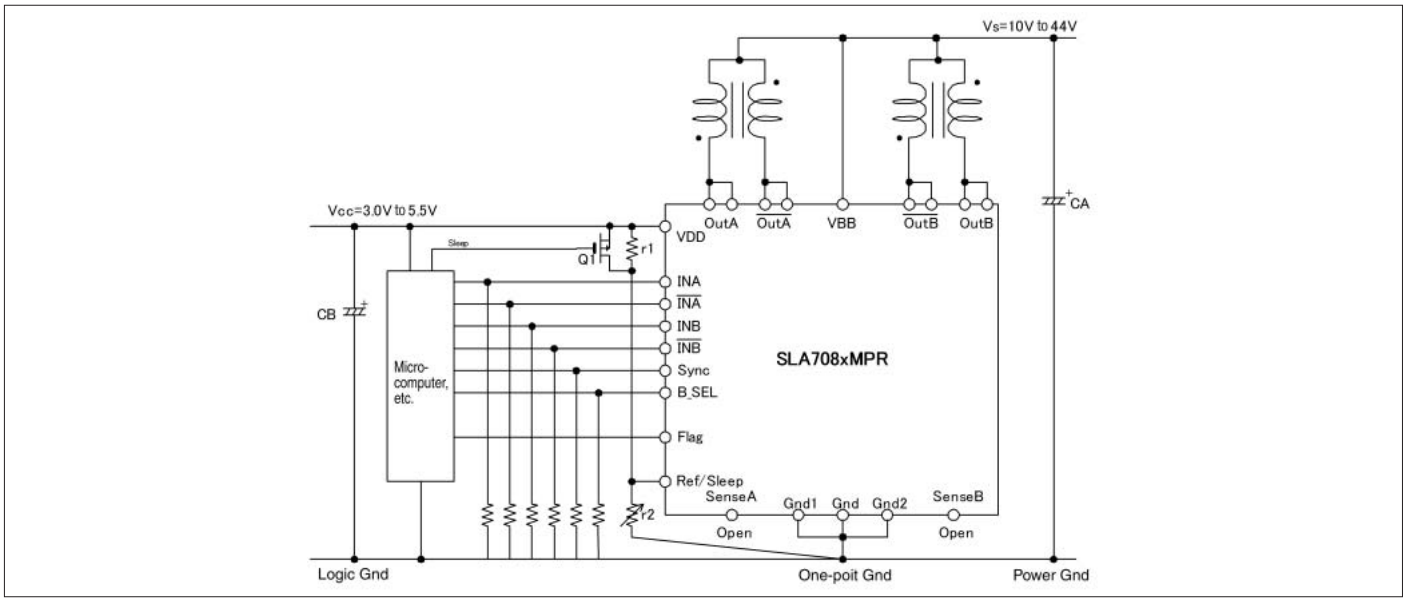

* The flag pin is N.C. for SLA7080MR, SLA7081MR, SLA7082MR, and SLA7083MR.

■External Dimensions (ZIP23 with Fin [SLA23Pin])

(Unit : mm)

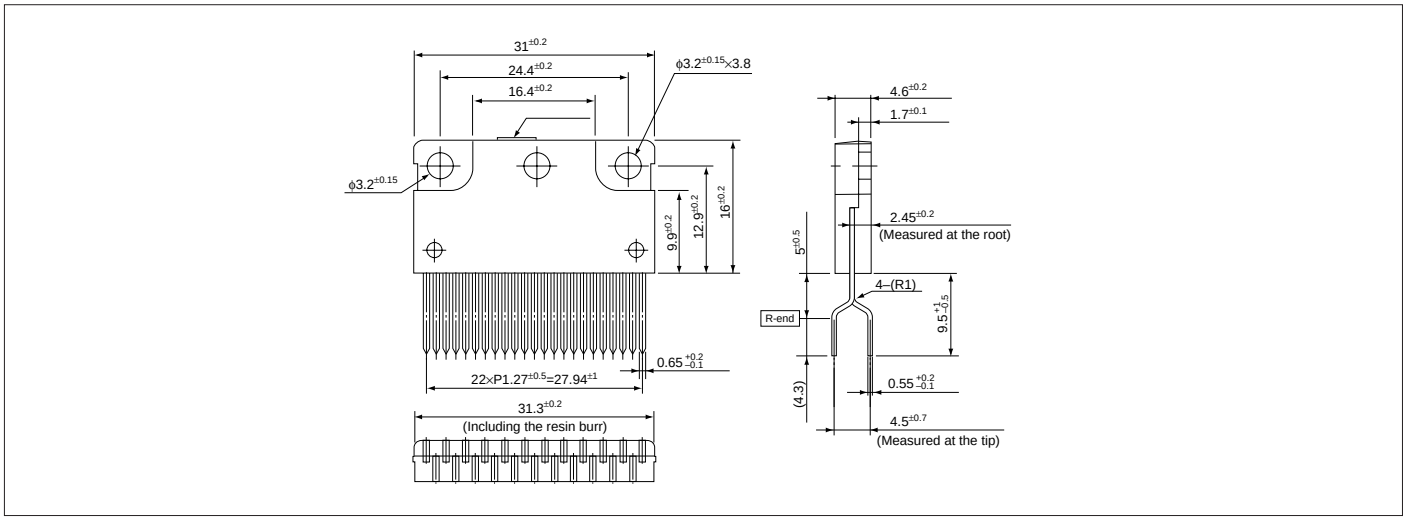

SLA7042M/SLA7044M 2W1-2 Phase Excitation/Micro-step Support

■Absolute Maximum Ratings

Parameter	Symbol	Ratings		Unit
		SLA7042M	SLA7044M	
Motor Supply Voltage	V_{CC}	46		V
FET Drain-Source Voltage	V_{DSS}	100		V
Control Supply Voltage	V_{DD}	7		V
Input Voltage	V_{IN}	–0.5 to V_{DD}+0.5		V
Output Current	I_O	1.2	3.0	A
Power Dissipation	P_D	4.5 (Without Heatsink)		W
Channel Temperature	T_{ch}	+150		°C
Storage Temperature	T_{stg}	–40 to +150		°C

■Electrical Characteristics

	Parameter		Symbol	Ratings						Unit
				SLA7042M			SLA7044M			
				min.	typ.	max.	min.	typ.	max.	
DC Characteristics	Control Supply Current		I_{DD}			7			7	mA
			Conditions	V_{DD}=5.5V			V_{DD}=5.5V			
	Control Supply Voltage		V_{DD}	4.5	5	5.5	4.5	5	5.5	V
	Terminals DATA, CLOCK and STROBE	Input Voltage	V_{IH}	3.5		5	3.5		5	V
			Conditions	V_{DD}=5V			V_{DD}=5V			
			V_{IL}	0		1.5	0		1.5	
			Conditions	V_{DD}=5V			V_{DD}=5V			
		Input Hysteresis Voltage	V_H		1			1		V
			Conditions	V_{DD}=5V			V_{DD}=5V			
		Input Current	I_I			±1			±1	μA
			Conditions	V_{DD}=5V, V_I=0 or 5V			V_{DD}=5V, V_I=0 or 5V			
	REF Terminal	Input Voltage	V_{REF}	0.4		2.5	0.4		2.5	V
			Conditions	V_{DD}=5V			V_{DD}=5V			
			$V_{DISABLE}$	V_{DD}–1		V_{DD}	V_{DD}–1		V_{DD}	
			Conditions	V_{DD}=5V			V_{DD}=5V			
		Input Current	I_{REF}			±1			±1	μA
			Conditions	V_{DD}=5V, V_I=0 or 5V			V_{DD}=5V, V_I=0 or 5V			
	Step Reference Current Ratio		V_{ref}	0			0			%
			Conditions	MODE 0			MODE 0			
			V_{ref}	20			20			
			Conditions	MODE 1			MODE 1			
			V_{ref}	40			40			
			Conditions	MODE 2			MODE 2			
			V_{ref}	55.5			55.5			
			Conditions	MODE 3			MODE 3			
			V_{ref}	71.4			71.4			
			Conditions	MODE 4			MODE 4			
			V_{ref}	83			83			
			Conditions	MODE 5			MODE 5			
			V_{ref}	91			91			
			Conditions	MODE 6			MODE 6			
			V_{ref}	100			100			
			Conditions	MODE 7			MODE 7			
	FET ON Voltage		V_{DS}			0.8			1.4	V
			Conditions	I_D=1.2A, V_{DD}=4.75V			I_D=3.0A, V_{DD}=4.75V			
	FET Drain-Source Voltage		V_{DSS}	100			100			V
			Conditions	I_{DSS}=4mA, V_{DD}=5V			I_{DSS}=4mA, V_{DD}=5V			
	FET Drain Leakage Current		I_{DSS}			4			4	mA
			Conditions	V_{DSS}=100V, V_{DD}=5V			V_{DSS}=100V, V_{DD}=5V			
	FET Diode Forward Voltage		V_{SD}			1.2			2.3	V
			Conditions	I_D=1.2A			I_D=3A			
AC Characteristics	Chopper Off Time		T_{OFF}		7			7		μs
			Conditions	MODE 1, 2			MODE 1, 2			
			T_{OFF}		9			9		
			Conditions	MODE 3, 4, 5			MODE 3, 4, 5			
			T_{OFF}		11			11		
			Conditions	MODE 6, 7			MODE 6, 7			
	Switching Time		T_r		0.5			0.5		μs
			Conditions	V_{DD}=5V, I_D=1A			V_{DD}=5V, I_D=1A			
			T_{stg}		0.7			0.7		
			Conditions	V_{DD}=5V, I_D=1A			V_{DD}=5V, I_D=1A			
			T_f		0.1			0.1		
			Conditions	V_{DD}=5V, I_D=1A			V_{DD}=5V, I_D=1A			
	Data Setup Time "A"		t_{s}DAT	75			75			ns
			Conditions	Data active time before clock ↓			Data active time before clock ↓			
	Data Hold Time "B"		t_{h}DAT	75			75			
			Conditions	Data active time before clock ↓			Data active time before clock ↓			
	Data Pulse Time "C"		t_{w}DAT	150			150			
			Conditions							
	Clock Pulse Width "D"		t_{wh}CLK	100			100			
			Conditions							
	Strobe Stability Time "E"		t_{ps}STB	100			100			
			Conditions	Time from clock ↓ to Strobe ↓			Time from clock ↓ to Strobe ↓			
	Strobe Pulse H Width "F"		t_{wh}STB	100			100			
			Conditions							

■Internal Block Diagram

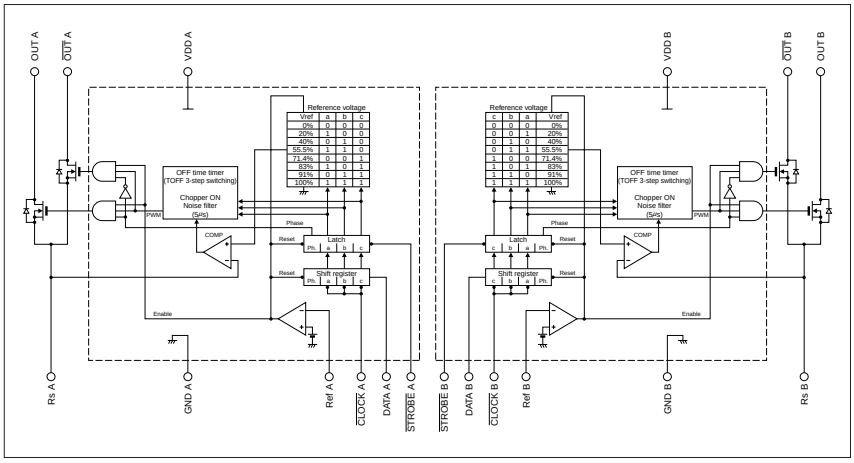

■Serial Data Pattern

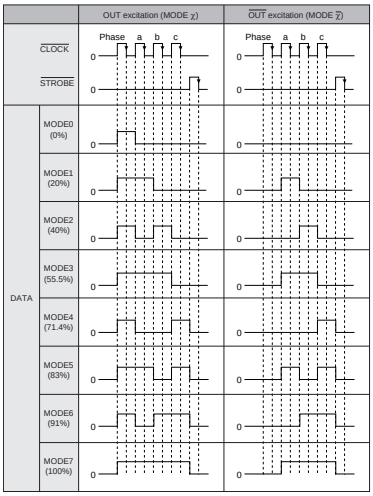

Successively output this serial data and set any current. Then, determine the step time of the reference voltage Vref with $\overline{\text{STROBE}}$ signal intervals.

■Diagram of Standard External Circuit

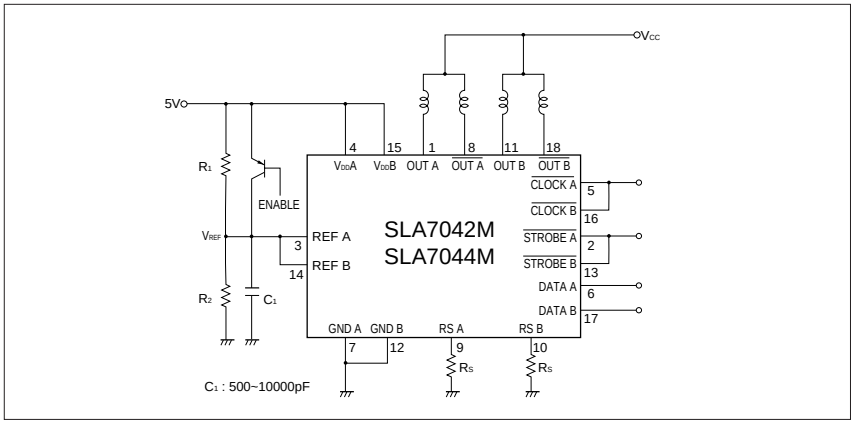

■Output Current Formula

$$I_O = \frac{K}{3} \cdot \frac{V_{REF}}{R_S}$$

K:Reference voltage setting ratio by serial signal (See the internal block diagram)

■External Dimensions (ZIP18 with Fin [SLA18Pin])

(Unit : mm)

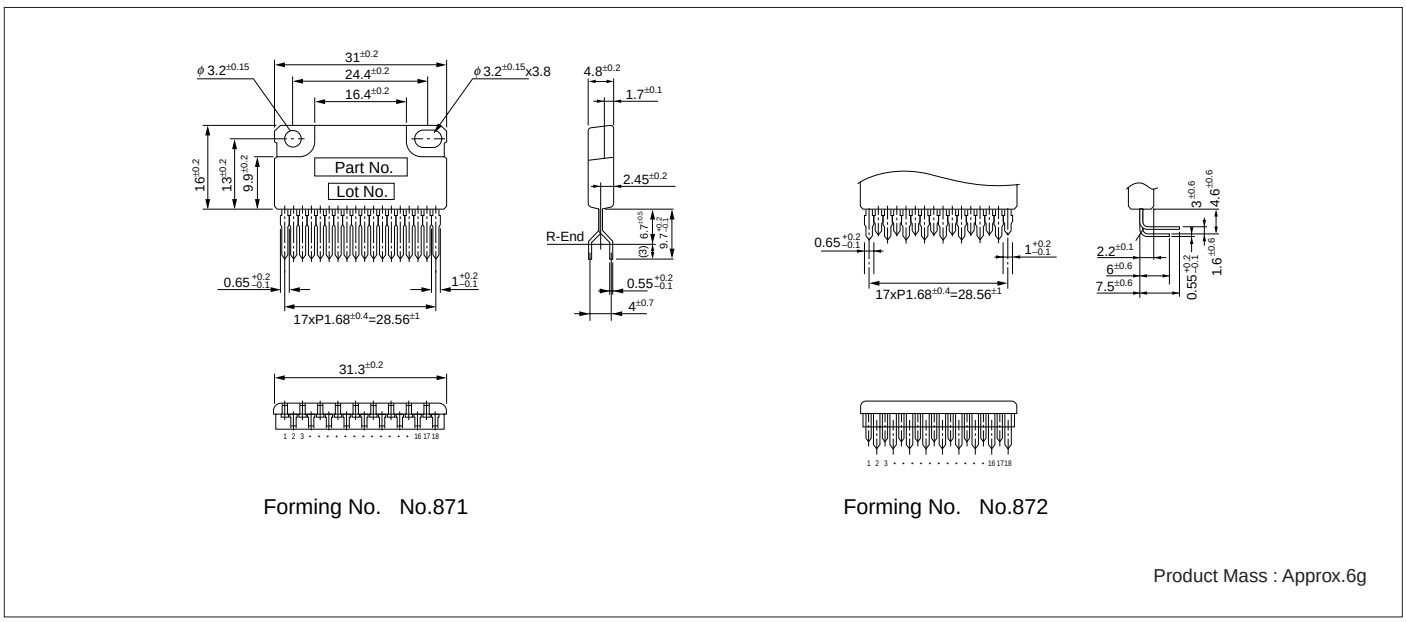

SLA7065M/SLA7066M/SLA7067M 2-Phase to 2W 1-2 Phase Excitation Support, Built-in Sequencer

■Features

- Main supply voltage VBB: 46V (max), 10 to 44V recommended
- Logic supply voltage V_{DD}: 3.0 to 5.5V support
- Lineup of output current I_O: 1A, 2A, 3A (maximum set current)
- Supporting the clock-input-method micro-step drive (built-in sequencer)
- 2-phase excitation to 2W 1-2 phase excitation support
- Self-excitation PWM current control method
- Built-in synchronous chopping function to prevent the audible motor noise in the hold state
- ZIP type 21-Pin mold package (SLA package)

■Absolute Maximum Ratings

(T_a=25°C)

Parameter	Symbol	Ratings			Unit
		SLA7065M	SLA7066M	SLA7067M	
Motor Supply Voltage	V_M	46			V
Driver Supply Voltage	V_{BB}	46			V
Logic Supply Voltage	V_{DD}	7			V
Output Current	I_O	1.0	2.0	3.0	A
Logic Input Voltage	V_{IN}	–0.3 to V_{DD}+0.3			V
REF Input Voltage	V_{REF}	–0.3 to V_{DD}+0.3			V
Sense Voltage	V_{RS}	–2 to +2 (tw >1μs)			V
Power Dissipation	P_D	3.5 (Without Heatsink)			W
Junction Temperature	T_j	+150			°C
Operating Ambient Temperature	T_a	–20 to +85			°C
Storage Temperature	T_{stg}	–30 to +150			°C

■Recommended Operating Conditions

Parameter	Symbol	Ratings		Unit	Remarks
		min.	max.		
Motor Supply Voltage	V_M		44	V	
Driver Supply Voltage	V_{BB}	10	44	V	
Logic Supply Voltage	V_{DD}	3.0	5.5	V	The V_{DD} surge voltage should be 0.5V or lower.
REF Input Voltage	V_{REF}	0.1	1.0	V	The control current precision is degraded at 0.1V or lower.
Case Temperature	T_C		90	°C	Temperature at pin-11 Lead (Without heatsink)

■Electrical Characteristics

(V_{DD}=5V, V_{BB}=24V, T_a=25°C, unless otherwise specified)

Parameter	Symbol	Ratings									Unit
		SLA7065M			SLA7066M			SLA7067M			
		min.	typ.	max.	min.	typ.	max.	min.	typ.	max.	
Main Supply Current	I_{BB}			15			15			15	mA
	Conditions	In operation			In operation			In operation			
	I_{BBS}			100			100			100	μA
	Conditions	Sleep mode			Sleep mode			Sleep mode			
Logic Supply Current	I_{DD}			4			4			4	mA
Output MOSFET Breakdown Voltage	$V_{(BR)DS}$	100			100			100			V
	Conditions	V_{BB}=44V, I_D=1mA			V_{BB}=44V, I_D=1mA			V_{BB}=44V, I_D=1mA			
Output MOSFET ON Resistance	$R_{DS(ON)}$		0.7			0.25			0.18		Ω
	Conditions	I_D=1A			I_D=2A			I_D=3A			
Output MOSFET Diode Forward Voltage	V_F		0.85			0.95			0.95		V
	Conditions	I_F=1A			I_F=2A			I_F=3A			
Maximum Clock Frequency	f_{clk}	250			250			250			kHz
	Conditions	When Clock Duty = 50%			When Clock Duty = 50%			When Clock Duty = 50%			
Logic Input Voltage	V_{IL}			V_{DD}·0.25			V_{DD}·0.25			V_{DD}·0.25	V
	V_{IH}	V_{DD}·0.75			V_{DD}·0.75			V_{DD}·0.75			
Logic Input Current	I_{IL}		±1			±1			±1		μA
	I_{IH}		±1			±1			±1		
	Conditions	Clock, Reset, CW/CCW, Sync			Clock, Reset, CW/CCW, Sync			Clock, Reset, CW/CCW, Sync			
	I_{ILM}		–50			–50			–50		
	I_{IH}		±1			±1			±1		
	Conditions	M1, M2			M1, M2			M1, M2			
REF Input Voltage	V_{REF}	0		1.5	0		1.5	0		1.5	V
	Conditions	Normal-operation current control			Normal-operation current control			Normal-operation current control			
	V_{REFS}	2		V_{DD}	2		V_{DD}	2		V_{DD}	
	Conditions	Output OFF (sleep)			Output OFF (sleep)			Output OFF (sleep)			
REF Input Current	I_{REF}		±10			±10			±10		μA
Mo Output Voltage	V_{MoL}			1.25			1.25			1.25	V
	Conditions	I_{MOL}=1.5mA			I_{MOL}=1.5mA			I_{MOL}=1.5mA			
	V_{MoH}	V_{DD}–1.25			V_{DD}–1.25			V_{DD}–1.25			
	Conditions	I_{MOH}=–1.5mA			I_{MOH}=–1.5mA			I_{MOH}=–1.5mA			
Mo Output Current	I_{MoL}			3			3			3	mA
	I_{MoH}	–3			–3			–3			
Sense Terminal Inflow Current	I_{SENSE}		±10			±10			±10		μA
Sense Voltage	V_{SENSE}	0.95	1.00	1.05	0.95	1.00	1.05	0.95	1.00	1.05	V
	Conditions	When V_{REF} = 1V in Mode F			When V_{REF} = 1V in Mode F			When V_{REF} = 1V in Mode F			
Step Reference Current Ratio	Mode F		100			100			100		%
	Mode E		98.1			98.1			98.1		
	Mode C		92.4			92.4			92.4		
	Mode A		83.1			83.1			83.1		
	Mode 8		70.7			70.7			70.7		
	Mode 6		55.5			55.5			55.5		
	Mode 4		38.2			38.2			38.2		
	Mode 2		19.5			19.5			19.5		
	Conditions	V_{REF}÷V_{SENSE}=100%, V_{REF}=0.1 to 1.0V			V_{REF}÷V_{SENSE}=100%, V_{REF}=0.1 to 1.0V			V_{REF}÷V_{SENSE}=100%, V_{REF}=0.1 to 1.0V			
Switching Time	T_{ONC}		2.0			2.0			2.0		μs
	Conditions	Clock→OutON			Clock→OutON			Clock→OutON			
	T_{OFFC}		1.5			1.5			1.5		
	Conditions	Clock→OutOFF			Clock→OutOFF			Clock→OutOFF			
PWM Minimum ON Time	$T_{ON(min)}$		1.8			1.8			1.8		μs
	Conditions	Mode 2 to F			Mode 2 to F			Mode 2 to F			
	t_{OFF1}		12			12			12		μs
	Conditions	Mode 8 to F			Mode 8 to F			Mode 8 to F			
Chopping OFF Time	t_{OFF2}		9			9			9		μs
	Conditions	Mode 4 to 6			Mode 4 to 6			Mode 4 to 6			
	t_{OFF3}		7			7			7		
	Conditions	Mode 2			Mode 2			Mode 2			

The direction in which current flows out of the device is regarded as negative.

■Internal Block Diagram

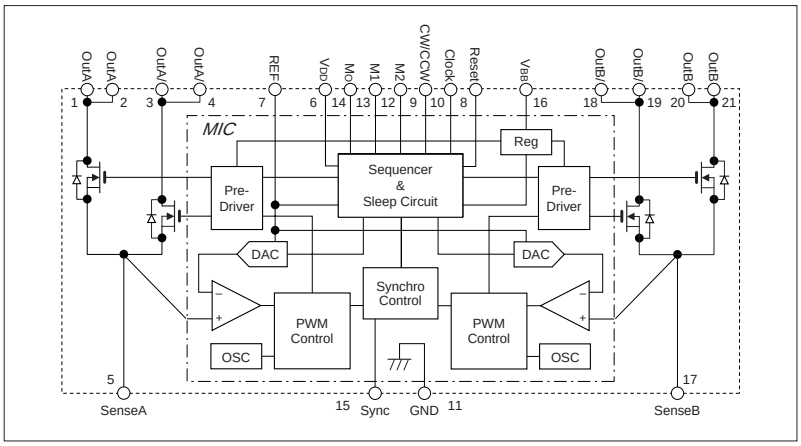

■Pin Assignment

Pin No.	Symbol	Function
1	OutA	Phase A output
2		
3	OutA/	Phase $\overline{A}$ output
4		
5	SenseA	Phase A current sense
6	V_{DD}	Logic supply
7	REF	Control current setting & output OFF control input
8	Reset	Internal logic reset input
9	CW/CCW	Normal/reverse control input
10	Clock	Step Clock input
11	GND	Device GND
12	M2	Excitation mode setting input
13	M1	
14	M_O	2-phase excitation state monitor output
15	Sync	PWM control signal input
16	V_{BB}	Driver supply (motor supply)
17	SenseB	Phase B current sense
18	OutB/	Phase $\overline{B}$ output
19		
20	OutB	Phase B output
21		

■Typical Connection Diagram

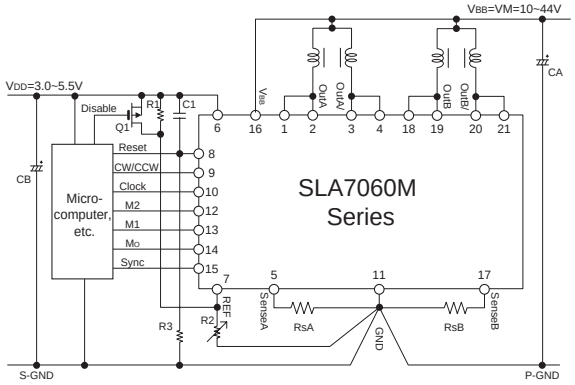

Component Values (Typical)
Rs=0.1 to 2Ω (Power dissipation should be: P≒I_O^2×Rs)

R1=10kΩ	CA=100μF/50V
R2=5.1kΩ (VR)	CB=10μF/10V
R3=10kΩ	C1=0.1μF

* V_{DD} line noise precaution:
  The device may malfunction if the V_{DD} line noise exceeds 0.5V.
  As a countermeasure, separating the V_{DD} system GND (S-GND) and V_{BB} system GND (P-GND) from the device GND (Pin-11) helps to reduce noise.

* Be sure to connect the unused logic input terminals (CW/CCW, M1, M2, Reset, Sync) to V_{DD} or GND.
  Otherwise, the device will malfunction.

* Be sure to open the unused logic output terminal Mo.

■External Dimensions (ZIP21 with Fin [SLA21Pin])

(Unit : mm)

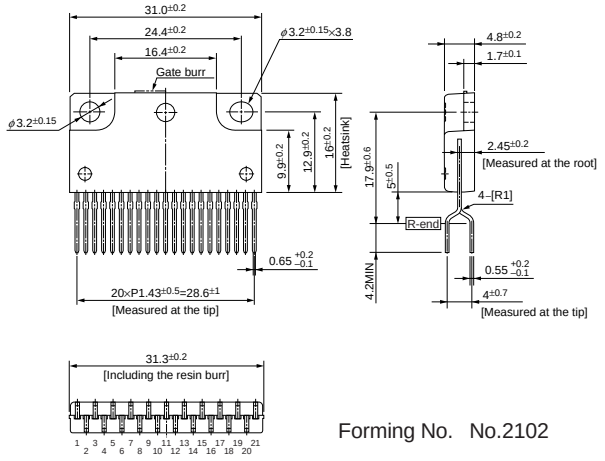

Forming No. No.2102

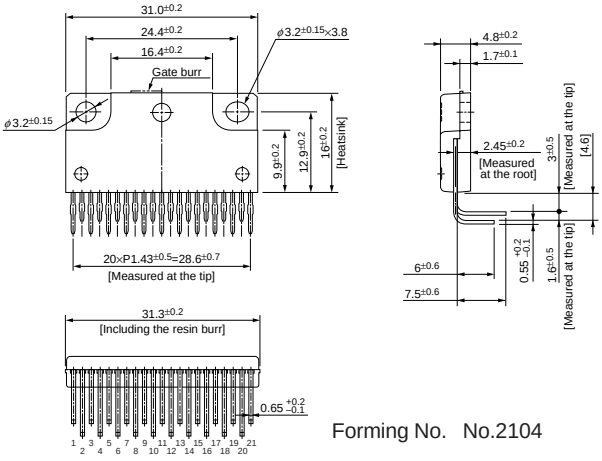

Forming No. No.2104

Product Mass : Approx.6g

SI-7321M 2-Phase to 4W 1-2 Phase Excitation Support, Built-in Sequencer

■Features

- Power supply voltages, VBB: 46 V (max), 10 to 44 V normal operating range
- Logic supply voltages, VDD: 3.0 to 5.5 V
- Output Current Io: 1.5A
- Clock input method (built-in sequencer)
- Self-excitation PWM current control with fixed off time
- Synchronous PWM chopping function prevents motor noise in Hold mode
- Sleep mode for reducing the IC input current in stand-by state
- Selectable blanking time (1.8 us or 3.6 us)
- Selectable clock input edge (POS or POS/NEG)
- Selectable protection availability
- 44-pin surface-mount

■Absolute Maximum Ratings

(T_a=25°C)

Parameter	Symbol	Ratings	Unit	Conditions
Motor Supply Voltage	V_M	46	V	
Driver Supply Voltage	V_{BB}	46	V	
Logic Supply Voltage	V_{DD}	6	V	
Output Current	Io	1.5	A	Current ratio: Mode F
Logic Input Voltage	V_{IN}	–0.3 to V_{DD}+0.3	V	
REF Input Voltage	V_{REF}	–0.3 to V_{DD}+0.3	V	
Sense Voltage	V_{RS}	±2	V	Excluding tw<1μs
Power Dissipation	P_D	3.5	W	When Ta = 25°C
Junction Temperature	Tj	+150	℃	
Operating Ambient Temperature	Ta	–20 to +80	℃	
Storage Temperature	Tstg	–30 to +150	℃	

*: Output current value may be limited, depending on the duty ratio, ambient temperature, and heating conditions.
Do not exceed junction temperature of Tj under any circumstances.

■Recommended Operating Conditions

Parameter	Symbol	Ratings		Unit	Conditions
		min.	max.		
Motor Supply Voltage	V_M		44	V	
Driver Supply Voltage	V_{BB}	10	44	V	
Logic Supply Voltage	V_{DD}	3.3	5.5	V	The V_{DD} surge voltage should be 0.5V or lower.
REF Input Voltage	V_{REF}	0.04	1.0	V	When not using protection
			0.5		When using protection
Case Temperature	Tc		85	℃	Temperature at the center of the package

■Electrical Characteristics

(V_{DD}=5V, V_{BB}=24V, T_a=25°C, unless otherwise specified)

Parameter	Symbol	Ratings			Unit	Conditions
		min.	typ.	max.		
Driver Supply Current	I_{BB}			15	mA	In operation
	I_{BBS}			100	μA	Sleep Mode
Logic Supply Current	I_{DD}			5	mA	
Output MOSFET Breakdown Voltage	$V_{(BR)DSS}$	100			V	V_{BB}=44V, I_D=1mA
Output MOSFET ON Resistance	$R_{DS(ON)}$		0.25	0.4	Ω	I_D=1.5A
Output MOSFET Diode Forward Voltage	V_F		0.95	1.2	V	I_F=1.5A
Maximum Clock Frequency	Fclk	250			kHz	When Duty = 50%
Logic Input Voltage	V_{IL}			0.25V_{DD}	V	
	V_{IH}	0.75V_{DD}				
Logic Input Current	I_{IL}		±1		μA	
	I_{IH}		±1			
REF Input Voltage	V_{REF}	0.04		1.5	V	When not using protection
		0.04		0.6		When using protection
	V_{REFS}	2		V_{DD}		Sleep1 Mode
REF Input Current	I_{REF}		±10		μA	V_{REF}=0 to V_{DD}
Logic Output Voltage	V_{LOL}			1.25	V	I_{LOL}=1.25mA
	V_{LOH}	V_{DD}-1.25			V	I_{LOH}=–1.25mA
Logic Output Current	I_{LOL}			1.25	mA	
	I_{LOH}	–1.25			mA	
Sense Voltage	V_{SENSE}		0.2		V	V_{REF}=0.2V, Mode F
Overcurrent Sense Voltage	Vocp	0.65	0.7	0.75	V	against Vsence
Step Reference Current Ratio	Mode F		100		%	V_{REF}=0.04V to 1.5V
	Mode E		98.1		%	
	Mode D		95.7		%	
	Mode C		92.4		%	
	Mode B		88.2		%	
	Mode A		83.1		%	
	Mode 9		77.3		%	
	Mode 8		70.7		%	
	Mode 7		63.4		%	
	Mode 6		55.5		%	
	Mode 5		47.1		%	
	Mode 4		38.2		%	
	Mode 3		29.0		%	
	Mode 2		19.5		%	
	Mode 1		9.8		%	
Sleep-Enable Recovery Time	T_{SE}	100			μS	Sleep1&Sleep2
Switching Time	tpdon1		2.0		μS	Clock → Out ON
			1.5		μS	Clock → Out OFF
PWM Minimum ON Time	ton(min)		1.8		μs	B_SEL: L
			3.6		μs	B_SEL: H
PWM OFF Time	toff1		13		μs	Mode8 to F
	toff2		9.5		μs	Mode4 to 7
	toff3		7.5		μs	Mode1 to 3
Time Not Sensing Load Disconnection	topp	1.5	2	2.5	μs	Starts when the PWM is turned off.

The direction in which current flows out of the device is regarded as negative.

■Internal Block Diagram

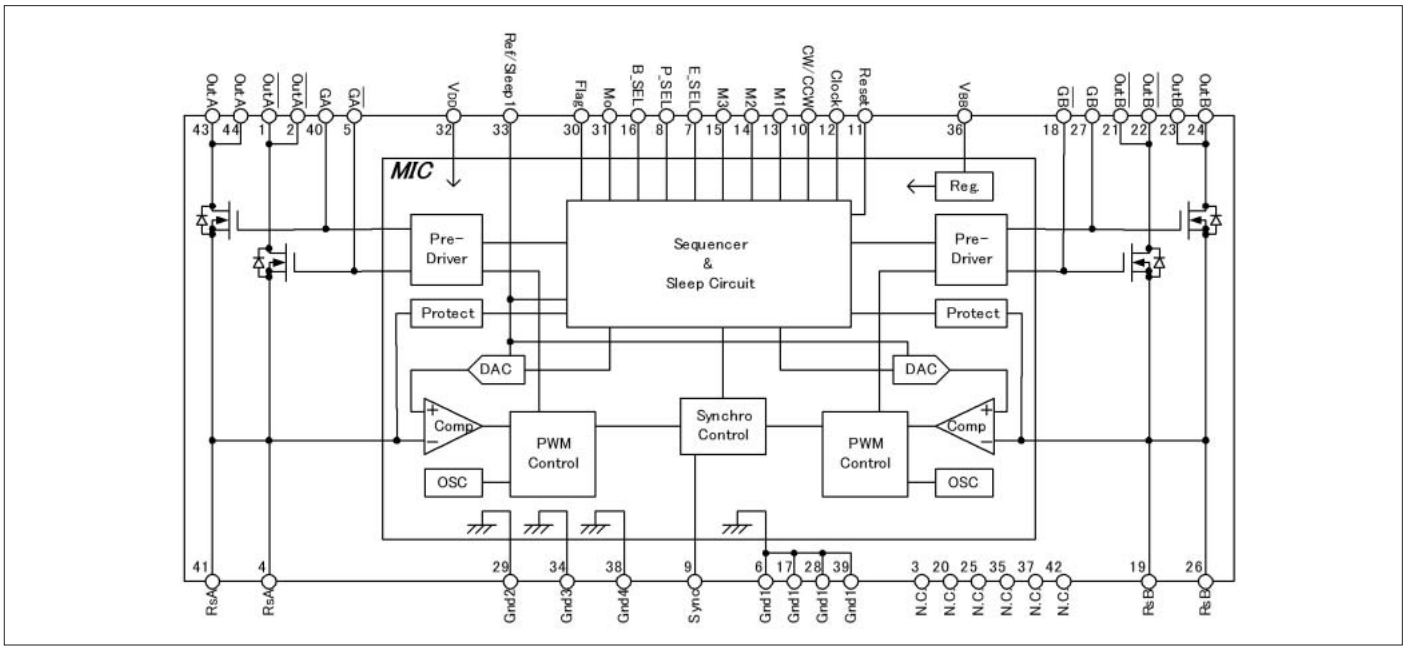

■Typical Connection Diagram

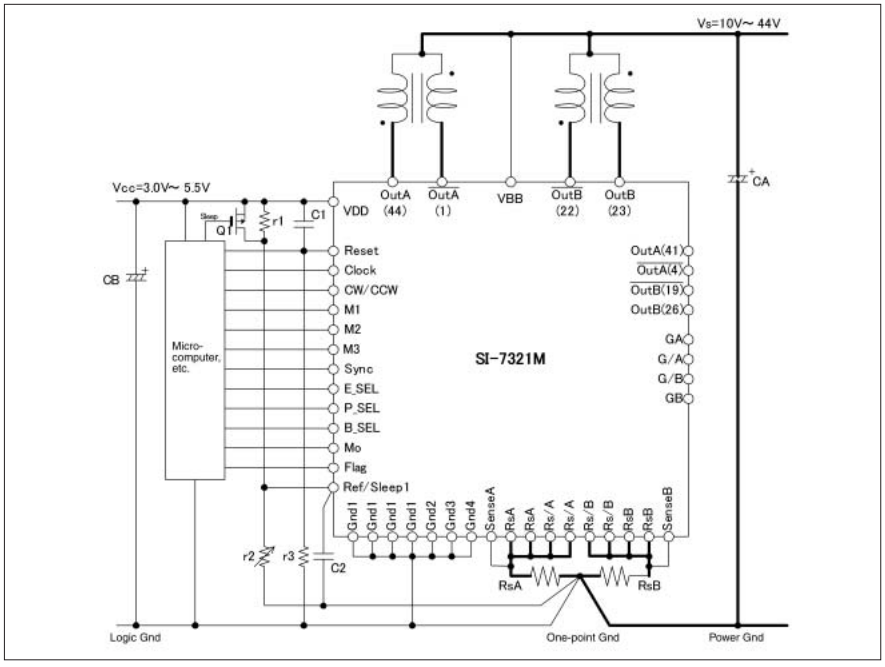

■External Dimensions (HSOP44)

(Unit : mm)

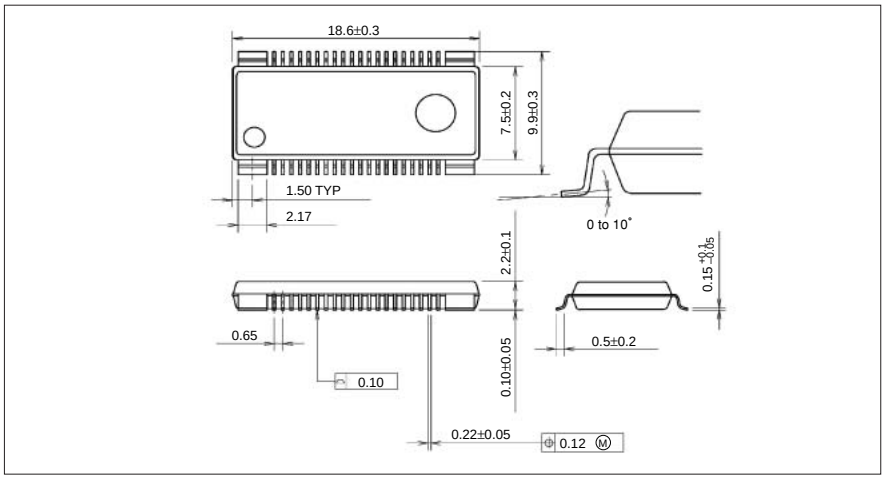

■Pin Assignment

Pin No.	Symbol	Function
1	Out/A	Phase $\overline{A}$ output
2	Out/A	Phase $\overline{A}$ output
3	N.C.	No connection
4	RsA	Connection terminal for phase A sense resistor
5	G/A	Phase $\overline{A}$ MOSFET gate
6	Gnd1	Device Gnd1
7	E_SEL	Edge selection input
8	P_SEL	Protection use selection input
9	Sync	PWM control signal input
10	CW/CCW	Normal/reverse control input
11	Reset	Internal logic reset input
12	Clock	Step clock input
13	M1	Excitation mode/Sleep 2 setting input
14	M2	
15	M3	
16	B_SEL	Blanking time selection input
17	Gnd1	Device Gnd1
18	G/B	Phase $\overline{B}$ MOSFET gate
19	RsB	Connection terminal for phase B sense resistor
20	N.C.	No connection
21	Out /B	Phase $\overline{B}$ output
22	Out /B	Phase $\overline{B}$ output
23	OutB	Phase B output
24	OutB	Phase B output
25	N.C.	No connection
26	RsB	Connection terminal for phase B sense resistor
27	GB	Phase B MOSFET gate
28	Gnd1	Device Gnd1
29	Gnd2	Device Gnd2
30	Flag	Protection circuit monitor output
31	Mo	2-phase excitation state monitor output
32	VDD	Logic supply
33	Ref/Sleep1	Control current mode/Sleep 1 setting input
34	Gnd3	Device Gnd3
35	N.C.	No connection
36	VBB	Driver supply (motor supply)
37	N.C.	No connection
38	Gnd4	Device Gnd4
39	Gnd1	Device Gnd1
40	GA	Phase A MOSFET gate
41	RsA	Connection terminal for phase A sense resistor
42	N.C.	No connection
43	Out A	Phase A output
44	Out A	Phase A output

SLA7060M/SLA7061M/SLA7062M 1-2 Phase to 4W 1-2 Phase Excitation Support, Built-in Sequencer

■Features

- Main supply voltage V_{BB}: 46V (max), 10 to 44V recommended
- Logic supply voltage V_{DD}: 3.0 to 5.5V support
- Lineup of output current I_O: 1A, 2A, 3A (maximum set current)
- Supporting the clock-input-method micro-step drive (built-in sequencer)
- 1-2 phase excitation to 4W 1-2 phase excitation support
- Self-excitation PWM current control method
- Built-in synchronous chopping function to prevent the audible motor noise in the hold state
- ZIP type 21-Pin mold package (SLA package)

■Absolute Maximum Ratings

(T_a=25°C)

Parameter	Symbol	Ratings			Unit
		SLA7060M	SLA7061M	SLA7062M	
Motor Supply Voltage	V_M	46			V
Driver Supply Voltage	V_{BB}	46			V
Logic Supply Voltage	V_{DD}	7			V
Output Current	I_O	1.0	2.0	3.0	A
Logic Input Voltage	V_{IN}	–0.3 to V_{DD}+0.3			V
REF Input Voltage	V_{REF}	–0.3 to V_{DD}+0.3			V
Sense Voltage	V_{RS}	–2 to +2 (tw > 1μs)			V
Power Dissipation	P_D	3.5 (Without Heatsink)			W
Junction Temperature	T_j	+150			°C
Operating Ambient Temperature	T_a	–20 to +85			°C
Storage Temperature	T_{stg}	–30 to +150			°C

■Recommended Operating Conditions

Parameter	Symbol	Ratings		Unit	Remarks
		min.	max.		
Motor Supply Voltage	V_M		44	V	
Driver Supply Voltage	V_{BB}	10	44	V	
Logic Supply Voltage	V_{DD}	3.0	5.5	V	The V_{DD} surge voltage should be 0.5V or lower.
REF Input Voltage	V_{REF}	0.1	1.0	V	The control current precision is degraded at 0.1V or lower.
Case Temperature	T_C		90	°C	Temperature at Pin-11 Lead (Without heatsink)

■Electrical Characteristics

(V_{DD}=5V, V_{BB}=24V, T_a=25°C, unless otherwise specified)

Parameter	Symbol	Ratings									Unit
		SLA7060M			SLA7061M			SLA7062M			
		min.	typ.	max.	min.	typ.	max.	min.	typ.	max.	
Main Supply Current	I_{BB}			15			15			15	mA
	Conditions	In operation			In operation			In operation			
	I_{BBS}			100			100			100	μA
	Conditions	Sleep mode			Sleep mode			Sleep mode			
Logic Supply Current	I_{DD}			4			4			4	mA
Output MOSFET Breakdown Voltage	$V_{(BR)DS}$	100			100			100			V
	Conditions	V_{BB}=44V, I_D=1mA			V_{BB}=44V, I_D=1mA			V_{BB}=44V, I_D=1mA			
Output MOSFET ON Resistance	$R_{DS(ON)}$		0.7			0.25			0.18		Ω
	Conditions	I_D=1A			I_D=2A			I_D=3A			
Output MOSFET Diode Forward Voltage	V_F		0.85			0.95			0.95		V
	Conditions	I_F=1A			I_F=2A			I_F=3A			
Maximum Clock Frequency	f_{clk}	250			250			250			kHz
	Conditions	When Clock Duty = 50%			When Clock Duty = 50%			When Clock Duty = 50%			
Logic Input Voltage	V_{IL}			V_{DD}·0.25			V_{DD}·0.25			V_{DD}·0.25	V
	V_{IH}	V_{DD}·0.75			V_{DD}·0.75			V_{DD}·0.75			
Logic Input Current	I_{IL}		±1			±1			±1		μA
	I_{IH}		±1			±1			±1		
	Conditions	Clock, Reset, CW/CCW, Sync			Clock, Reset, CW/CCW, Sync			Clock, Reset, CW/CCW, Sync			
	I_{ILM}		–50			–50			–50		
	I_{IH}		±1			±1			±1		
	Conditions	M1, M2			M1, M2			M1, M2			
REF Input Voltage	V_{REF}	0		1.5	0		1.5	0		1.5	V
	Conditions	Normal-operation current control			Normal-operation current control			Normal-operation current control			
	V_{REFS}	2		V_{DD}	2		V_{DD}	2		V_{DD}	
	Conditions	Output OFF (sleep)			Output OFF (sleep)			Output OFF (sleep)			
REF Input Current	I_{REF}		±10			±10			±10		μA
Mo Output Voltage	V_{MoL}			1.25			1.25			1.25	V
	Conditions	I_{MOL}=1.5mA			I_{MOL}=1.5mA			I_{MOL}=1.5mA			
	V_{MoH}	V_{DD}–1.25			V_{DD}–1.25			V_{DD}–1.25			
	Conditions	I_{MOH}=–1.5mA			I_{MOH}=–1.5mA			I_{MOH}=–1.5mA			
Mo Output Current	I_{MoL}			3			3			3	mA
	I_{MoH}	–3			–3			–3			
Sense Terminal Inflow Current	I_{SENSE}		±10			±10			±10		μA
Sense Voltage	V_{SENSE}	0.95	1.00	1.05	0.95	1.00	1.05	0.95	1.00	1.05	V
	Conditions	When V_{REF} = 1V in Mode F			When V_{REF} = 1V in Mode F			When V_{REF} = 1V in Mode F			
Step Reference Current Ratio	Mode F		100			100			100		%
	Mode E		98.1			98.1			98.1		
	Mode D		95.7			95.7			95.7		
	Mode C		92.4			92.4			92.4		
	Mode B		88.2			88.2			88.2		
	Mode A		83.1			83.1			83.1		
	Mode 9		77.3			77.3			77.3		
	Mode 8		70.7			70.7			70.7		
	Mode 7		63.4			63.4			63.4		
	Mode 6		55.5			55.5			55.5		
	Mode 5		47.1			47.1			47.1		
	Mode 4		38.2			38.2			38.2		
	Mode 3		29			29			29		
	Mode 2		19.5			19.5			19.5		
	Mode 1		9.8			9.8			9.8		
	Conditions	V_{REF}≒V_{SENSE}=100%, V_{REF}=0.1 to 1.0V			V_{REF}≒V_{SENSE}=100%, V_{REF}=0.1 to 1.0V			V_{REF}≒V_{SENSE}=100%, V_{REF}=0.1 to 1.0V			
Switching Time	T_{ONC}		2.0			2.0			2.0		μs
	Conditions	Clock→OutON			Clock→OutON			Clock→OutON			
	T_{OFFC}		1.5			1.5			1.5		
	Conditions	Clock→OutOFF			Clock→OutOFF			Clock→OutOFF			
PWM Minimum ON Time	$T_{ON(min)}$		1.8			1.8			1.8		μs
	Conditions	Mode 1 to F			Mode 1 to F			Mode 1 to F			
Chopping OFF Time	t_{OFF1}		12			12			12		μs
	Conditions	Mode 8 to F			Mode 8 to F			Mode 8 to F			
	t_{OFF2}		9			9			9		μs
	Conditions	Mode 4 to 7			Mode 4 to 7			Mode 4 to 7			
	t_{OFF3}		7			7			7		
	Conditions	Mode 1 to 3			Mode 1 to 3			Mode 1 to 3			

The direction in which current flows out of the product is regarded as negative.

■Internal Block Diagram

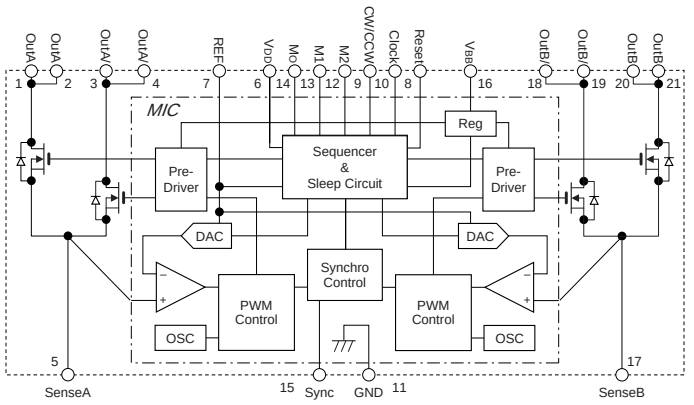

■Pin Assignment

Pin No.	Symbol	Function
1	OutA	Phase A output
2		
3	OutA/	Phase $\overline{A}$ output
4		
5	SenseA	Phase A current sense
6	V_{DD}	Logic supply
7	REF	Control current setting & output OFF control input
8	Reset	Internal logic reset input
9	CW/CCW	Normal/reverse control input
10	Clock	Step Clock input
11	GND	Device GND
12	M2	Excitation mode setting input
13	M1	
14	M_O	2-phase excitation state monitor output
15	Sync	PWM control signal input
16	V_{BB}	Driver supply (motor supply)
17	SenseB	Phase B current sense
18	OutB/	Phase $\overline{B}$ output
19		
20	OutB	Phase B output
21		

■Typical Connection Diagram

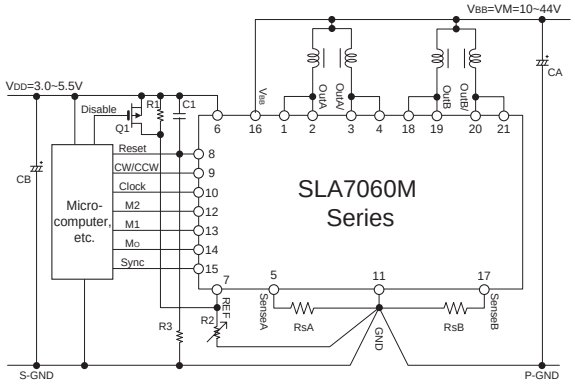

Component Values (Typical)

Rs=0.1 to 2Ω (Power dissipation should be: P≒I_O^2×Rs)

R1=10kΩ	CA=100μF/50V
R2=5.1kΩ (VR)	CB=10μF/10V
R3=10kΩ	C1=0.1μF

* V_{DD} line noise precaution:
  The device may malfunction if the V_{DD} line noise exceeds 0.5V. As a countermeasure, separating the V_{DD} system GND (S-GND) and V_{BB} system GND (P-GND) from the device GND (Pin-11) helps to reduce noise.

* Be sure to connect the unused logic input terminals (CW/CCW, M1, M2, Reset, Sync) to V_{DD} or GND.
  Otherwise, the device will malfunction.

* Be sure to open the unused logic output terminal Mo.

■External Dimensions (ZIP21 with Fin [SLA21Pin])

(Unit : mm)

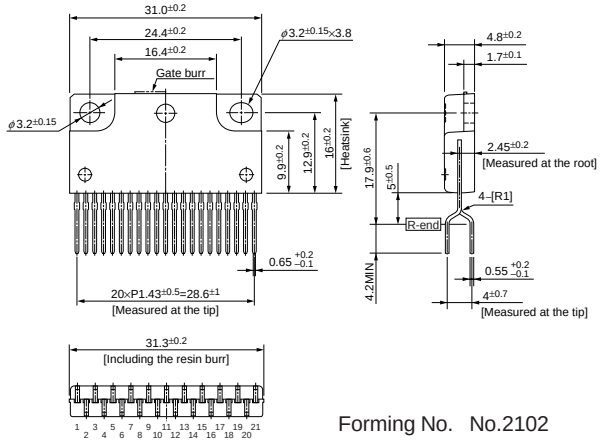

Forming No. No.2102

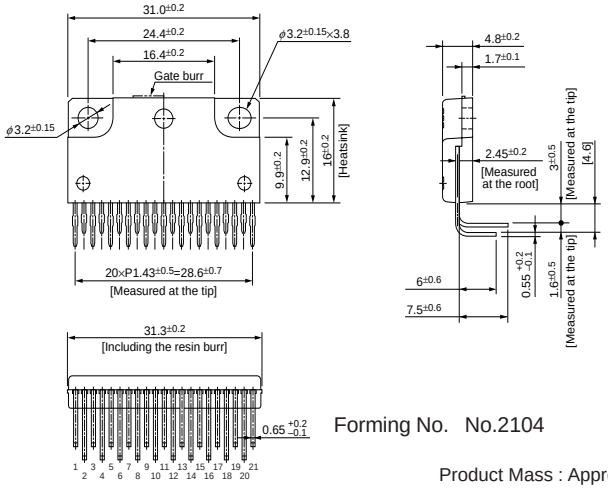

Forming No. No.2104

Product Mass : Approx.6g

SLA7075MR, MPR/7076MR, MPR/7077MR, MPR/7078MR, MPR 2-Phase/4 W1-2 Phase Excitation Support, Built-in Sequencer

■Features

- Lineup of built-in current sense resistor and built-in protection circuit-type
- Power supply voltages, V_{BB}: 46 V (max), 10 to 44 V normal operating range
- Logic supply voltages, V_{DD}: 3.0 to 5.5 V
- Maximum output currents: 1 A, 1.5 A, 2 A, and 3 A
- Built-in sequencer
- Self-excitation PWM current control with fixed off-time
- Synchronous PWM chopping function prevents motor noise in Hold mode
- Sleep mode for reducing the IC input current in stand-by state
- ZIP type 23-pin molded package (SLA package)

■Absolute Maximum Ratings

Parameter	Symbol	Ratings	Unit	Remarks
Motor Supply Voltage	V_M	46	V	
Driver Supply Voltage	V_{BB}	46	V	
Logic Supply Voltage	V_{DD}	6	V	
Output Current	Io	*1	A	Vref=0.4V, Mode F
Logic Input Voltage	V_{IN}	–0.3 to V_{DD}+0.3	V	
REF Input Voltage	V_{REF}	–0.3 to V_{DD}+0.3	V	
Sense Voltage	V_{RS}	±2	V	Excluding tw<1µs
Power Dissipation	PD	4.7	W	When T_a = 25°C
		17		When T_c = 25°C
Junction Temperature	T_j	+150	°C	
Operating Ambient Temperature	T_a	–20 to +85	°C	
Storage Temperature	T_{stg}	–30 to +150	°C	

*1: Output current value may be limited for the SLA7075MR, MPR (1.0 A), SLA7076MR, MPR (1.5 A), SLA7077MR, MPR (2.0 A), and SA7078MR, MPR (3.0 A), depending on the duty ratio, ambient temperature, and heating conditions. Do not exceed junction temperature of T_j under any circumstances.

■Recommended Operating Conditions

Parameter	Symbol	Rating min.	Rating max.	Unit	Remarks
Motor Supply Voltage	V_M		44	V	
Driver Supply Voltage	V_S	10	44	V	
Logic Supply Voltage	V_{DD}	3.0	5.5	V	The V_{CC} surge voltage should be 0.5 V or lower
REF Input Voltage	V_{REF}	0.0	0.4	V	When operating current control
Case Temperature	T_C		90	°C	Temperature at Pin-12 Lead (without heatsink)

■Electrical Characteristics

Parameter	Symbol	Ratings min.	Ratings typ.	Ratings max.	Unit	Conditions
Main Supply Current	I_{BB}			15	mA	In operation
	I_{BBS}			100	µA	Sleep 1 and Sleep 2 modes
Logic Supply Current	Icc			5	mA	
Output MOSFET Breakdown Voltage	$V_{(BR)DSS}$	100			V	VBB=44V, ID=1mA
Output MOSFET ON Resistance	$R_{DS(ON)}$		0.7	0.85	Ω	SLA7075M, ID=1.0A
			0.45	0.6		SLA7076M, ID=1.5A
			0.25	0.4		SLA7077M, ID=2.0A
			0.18	0.24		SLA7078M, ID=3.0A
Output MOSFET Diode Forward Voltage	V_F		0.85	1.1	V	SLA7075M, ID=1.0A
			1.0	1.25		SLA7076M, ID=1.5A
			0.95	1.2		SLA7077M, ID=2.0A
			0.95	2.1		SLA7078M, ID=3.0A
Maximum Clock Frequency	Fclock	250			kHz	When Clock Duty = 50%
Logic Input Voltage	V_{IL}			0.25V_{DD}	V	
	V_{IH}	0.75V_{DD}				
Logic Input Current	I_{IL}		±1		µA	
	I_{IH}		±1			
REF Input Voltage	V_{REF}	0.04		0.3	V	SLA7075MR/7075MPR, within the specified current limit
		0.04		0.45		SLA7077MR/7076MPR, within the specified current limit
		0.04		0.4		SLA7077MR/7077MPR, within the specified current limit
		0.04		0.45		SLA7078MR/7078MPR, within the specified current limit
	V_{REFS}	2		V_{DD}		Output (OFF) Sleep 1
REF Input Current	I_{REF}		±10		µA	
SENSE Sense Voltage	V_{SENSE}		V_{REF}		V	When step reference current ratio is 100%
Sleep-Enable Recovery Time	T_{SE}	100			µS	Sleep1&Sleep2
Switching Time	t_{con}		2.0		µS	Clock → Out ON
	t_{coff}		1.5		µS	Clock → Out OFF
Sense Resistance	R_S	0.296	0.305	0.314	Ω	SLA7075MR/7075MPR, tolerance of ±3%
		0.296	0.305	0.314		SLA7076MR/7076MPR, tolerance of ±3%
		0.199	0.205	0.211		SLA7077MR/7077MPR, tolerance of ±3%
		0.150	0.155	0.160		SLA7078MR/7078MPR, tolerance of ±3%
Overcurrent Sense Voltage	Vocp	0.65	0.7	0.75	V	SLA7075MPR/7076MPR/7077MPR/7078MPR, when motor coil shorts out
Overcurrent Sense Current	Iocp		2.3		A	SLA7075MPR/7076MPR
			3.5			SLA7077MPR
			4.6			SLA7078MPR
Flag Output Voltage	V_{FlagL}			1.25	V	SLA70750MPR/7076MPR/7077MPR/7078MPR, IFlagL=1.25mA
	V_{FlagH}	V_{DD}–1.25				SLA7075MPR/7076MPR/7077MPR/7078MPR, IFlagH=-1.25mA
Flag Output Current	I_{FlagL}			1.25	mA	SLA7075MPR/7076MPR/7077MPR/7078MPR
	I_{FlagH}	–1.25				
Step Reference Current Ratio	ModeF		100		%	
	ModeE		98.1		%	
	ModeD		95.7		%	
	ModeC		92.4		%	
	ModeB		88.2		%	
	ModeA		83.1		%	
	Mode9		77.3		%	
	Mode8		70.7		%	
	Mode7		63.4		%	
	Mode6		55.5		%	
	Mode5		47.1		%	
	Mode4		38.2		%	
	Mode3		29.0		%	
	Mode2		19.5		%	
	Mode1		9.8		%	
Mo (Load) Output Voltage	V_{MOL}			1.25	V	I_{MOL}=1.25mA
	V_{MOH}	V_{DD}–1.25				I_{MOH}=–1.25mA
Mo (Load) Output Current	I_{MOL}			1.25	mA	
	I_{MOH}	–1.25				
PWM Minimum ON Time	ton(min)		1.7		µS	
PWM OFF Time	toff1		12		µS	Mode 8 to F
	toff2		9		µS	Mode 4 to 7
	toff3		7		µS	Mode 1 to 3

■Internal Block Diagram

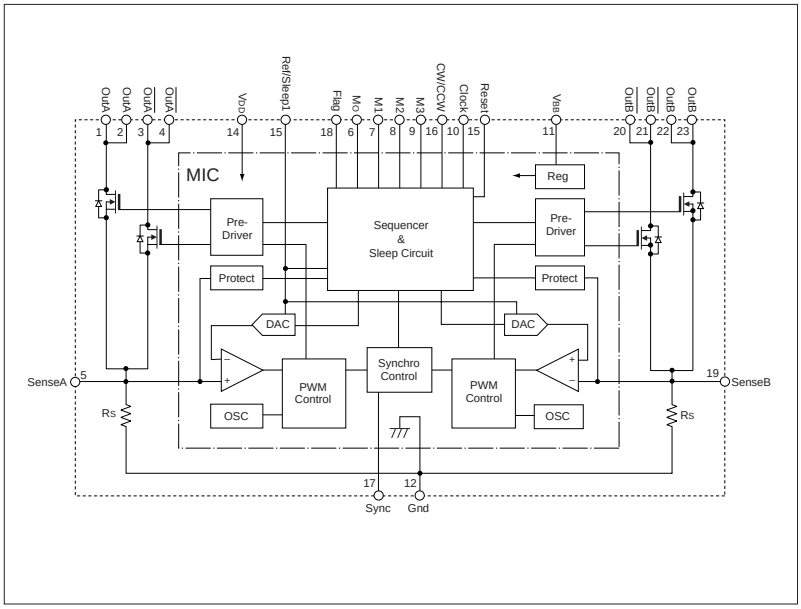

The protect circuit is deleted and the flag pin is N.C. for SLA7075MR, 7076MR, 7077MR, and 7078MR.

■Pin Assignment

Pin No.	Symbol	Function
1	OutA	Phase A output
2		
3	OutA/	Phase $\overline{A}$ output
4		
5	SenseA	Phase A current sense
6	M_O	2 phase excitation state output monitor output
7	M1	Excitation mode/Sleep 2 setting input
8	M2	
9	M3	
10	Clock	Step Clock input
11	V_{BB}	Driver supply (motor supply)
12	Gnd	Device GND
13	Ref/Sleep1	Control current mode/Sleep 1 setting input
14	V_{DD}	Logic supply
15	Reset	Internal logic reset input
16	CW/CCW	Normal/reverse control input
17	Sync	PWM control signal input
18	Flag*1	Protection circuit monitor output*1
19	SenseB	Phase B current sense
20	OutB/	Phase $\overline{B}$ current output
21		
22	OutB	Phase B current output
23		

*1: N.C. pin for SLA7075MR, 7076MR, 7077MR, and 7078MR.

■Typical Connection Diagram

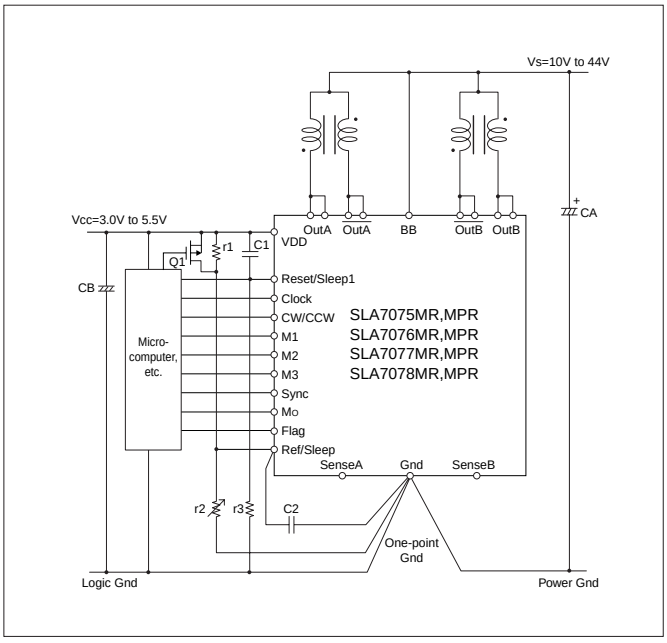

* There is no Flag pin (pin 18) for SLA7075MR, 7076MR, 7077MR, and 7078MR.

■External Dimensions (ZIP23 with Fin [SLA23Pin])

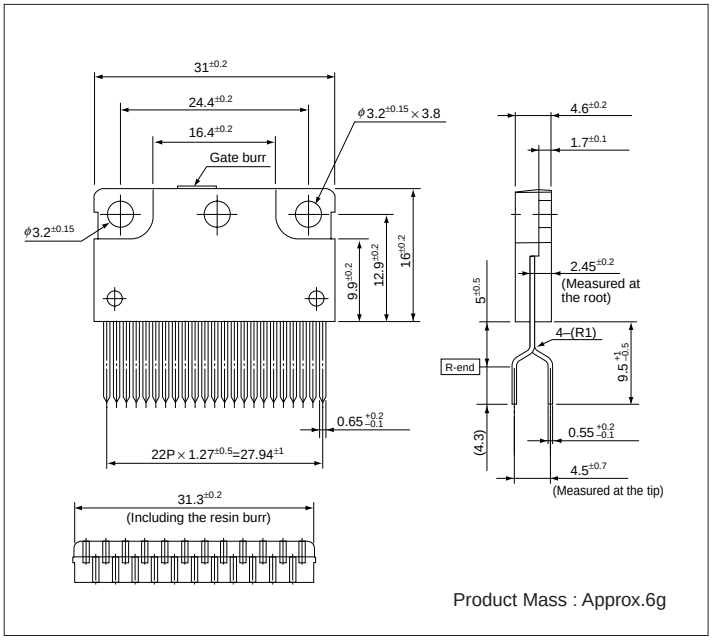

Product Mass : Approx.6g

PG001M Serial Signal Generator ICs for SLA7042M and SLA7044M

■Absolute Maximum Ratings

(T_a=25°C)

Parameter	Symbol	Ratings	Unit
Supply Voltage	V_{DD}	–0.5 to 7	V
Input Voltage	V_I	–0.5 to V_{DD}+0.5	V
Input Current	I_I	±10	mA
Output Voltage	V_O	–0.5 to V_{DD}+0.5	V
Output Current	I_O	±15	mA
Power Dissipation	P_D	200	mW
Operating Temperature	T_{OP}	–20 to +85	°C
Storage Temperature	T_{stg}	–40 to +150	°C

■Electrical Characteristics

(T_a=25°C)

	Parameter	Symbol	Conditions	Ratings min.	Ratings typ.	Ratings max.	Unit
DC characteristics	Supply Voltage	V_{DD}		4.5		5.5	V
	Supply Current	I_{DD}	V_{DD}=5.5V		0.35	0.45	mA
	Output Voltage	V_{OH}	V_{DD}=5V, I_O=±3mA	4.5			V
		V_{OL}				0.4	
	Input Current	I_I	V_{DD}=5V, V_I=0 or 5V			±1	μA
	Input Voltage	V_{IH}	V_{DD}=5V	3.5		5	V
		V_{IL}		–0.3		1.5	
	Input Hysteresis Voltage	V_H	V_{DD}=5V		1		V
	Input Capacity	C_I	V_{DD}=5V		5	10	pF
AC characteristics	Internal Oscillation Frequency	F	V_{DD}=5V See Fig.1.		1.5		MHz
	Propagation Delay Time	T_{CS}			50	100	ns
		T_{CC}			430	550	
	Output Voltage Rise and Fall Time	T_r	V_{DD}=5V, C_L=15pF See Fig.2.		20		ns
		T_f			20		
	CLOCK IN Terminal Input Clock Time	V_{CIH}	H level time, V_{DD}=5V	4.5			μs
		V_{CIL}	L level time, V_{DD}=5V	0.5			
	Reset Setting Time (A)	$_{ts}$R	From/To CLOCK_IN ↑ See Fig.3.	100			ns
	Stabilization Time After Reset Input (B)	$_{tps}$R					
	Signal Setting Time (C)	$_{ts}$S	From/To CLOCK_IN ↑ See Fig.3.	100			ns
	Stabilization Time After Signal Input (D)	$_{tps}$S					

Fig. 1

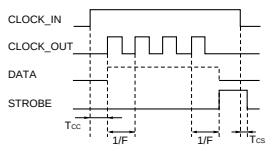

Fig.2

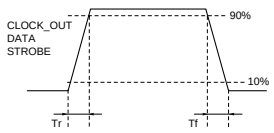

Fig. 3 Timing conditions

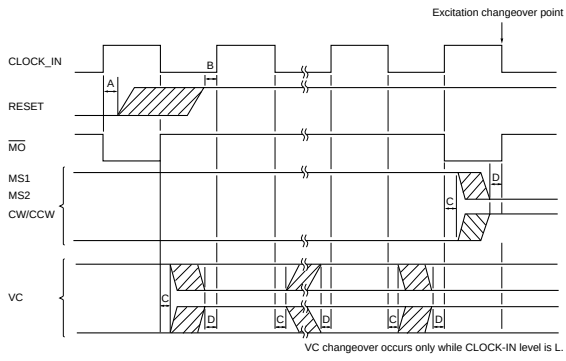

■Typical Connection Diagram

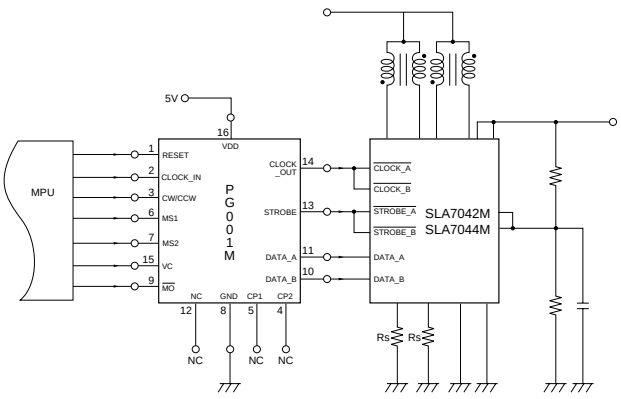

■Internal Block Diagram

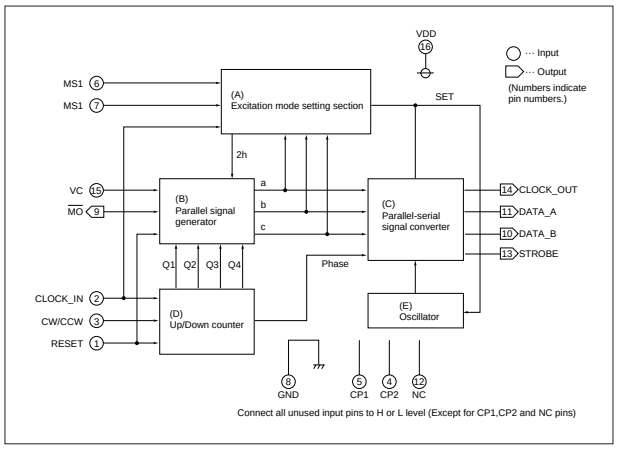

■Input and Output Function Correlation Table

Input				Output				
Mode	CLOCK_IN	CW/CCW	RESET	$\overline{MO}$	CLOCK_OUT	STROBE	DATA-A	DATA-B
CW	↑	L	H	↓	⊓⊓	↑	CW	CW
	↓	L	H	↑	—	↓		
CCW	↑	H	H	↓	⊓⊓	↑	CCW	CCW
	↓	H	H	↑	—	↓		
RESET	↑	×	L	↓	⊓⊓	↑	Output Mode 4 or 7 Output Mode	Input Mode 4 or 7 Output Mode
	↓	×	L	↑	—	↓		

×: Immaterial

*: $\overline{MO}$ outputs L level while CLOCK_IN is H level when output mode is 4:4 (7:7), $\overline{4}$:4 ($\overline{7}$:7), 4:$\overline{4}$ (7:$\overline{7}$), or $\overline{4}$:$\overline{4}$ ($\overline{7}$:$\overline{7}$).
Modes in brackets ( ) are for 2-2 phase VC:H.

■Excitation Selection Table

Excitation method	Input			Output current mode of SLA7042M/7044M								Torque vector
	Excitation mode selection			0	1	2	3	4	5	6	7	
	VC	MS1	MS2	0%	20%	40%	55.5%	71.4%	83%	91%	100%	
2-2 Phase Full Step	H	L	L	–	–	–	–	–	–	–	○	141%
	L	L	L	–	–	–	–	○	–	–	–	100%
1-2 Phase Half Step	×	H	L	○	–	–	–	○	–	–	○	100%
W1-2 Phase 1/4 Step	×	L	H	○	–	○	–	○	–	○	○	100%
2W1-2 Phase 1/8 Step	×	H	H	○	○	○	○	○	○	○	○	100%

■Output Mode Vs Output Pulse

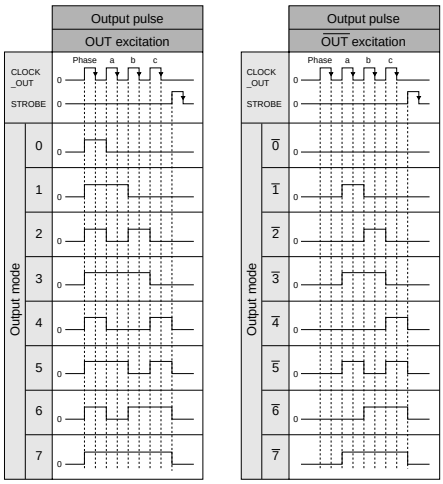

■Output Mode Sequence

Excitation method	CW/CCW	CLOCK	RESET	1	2	3	4	5	6	7	8	9	10	11	12	13	14	15	16	17	18	19	20	21	22	23	24	25	26	27	28	29	30	31	32
		$\overline{MO}$	L	H	H	H	H	H	H	H	L	H	H	H	H	H	H	H	L	H	H	H	H	H	H	H	L	H	H	H	H	H	H	H	L
2-2 Phase Full Step (1) (VC:H)	CW	DATA_A	7	=	=	=	=	=	=	=	$\overline{7}$	=	=	=	=	=	=	=	$\overline{7}$	=	=	=	=	=	=	=	7	=	=	=	=	=	=	=	7
		DATA_B	7	=	=	=	=	=	=	=	7	=	=	=	=	=	=	=	$\overline{7}$	=	=	=	=	=	=	=	$\overline{7}$	=	=	=	=	=	=	=	7
	CCW	DATA_A	7	=	=	=	=	=	=	=	7	=	=	=	=	=	=	=	$\overline{7}$	=	=	=	=	=	=	=	$\overline{7}$	=	=	=	=	=	=	=	7
		DATA_B	7	=	=	=	=	=	=	=	$\overline{7}$	=	=	=	=	=	=	=	$\overline{7}$	=	=	=	=	=	=	=	7	=	=	=	=	=	=	=	7
2-2 Phase Full Step (2) (VC:L)	CW	DATA_A	4	=	=	=	=	=	=	=	$\overline{4}$	=	=	=	=	=	=	=	$\overline{4}$	=	=	=	=	=	=	=	4	=	=	=	=	=	=	=	4
		DATA_B	4	=	=	=	=	=	=	=	4	=	=	=	=	=	=	=	$\overline{4}$	=	=	=	=	=	=	=	$\overline{4}$	=	=	=	=	=	=	=	4
	CCW	DATA_A	4	=	=	=	=	=	=	=	4	=	=	=	=	=	=	=	$\overline{4}$	=	=	=	=	=	=	=	$\overline{4}$	=	=	=	=	=	=	=	4
		DATA_B	4	=	=	=	=	=	=	=	$\overline{4}$	=	=	=	=	=	=	=	$\overline{4}$	=	=	=	=	=	=	=	4	=	=	=	=	=	=	=	4
1-2 Phase Half Step	CW	DATA_A	4	=	=	=	$\overline{0}$	=	=	=	$\overline{4}$	=	=	=	$\overline{7}$	=	=	=	$\overline{4}$	=	=	=	0	=	=	=	4	=	=	=	7	=	=	=	4
		DATA_B	4	=	=	=	7	=	=	=	4	=	=	=	$\overline{0}$	=	=	=	$\overline{4}$	=	=	=	$\overline{7}$	=	=	=	$\overline{4}$	=	=	=	0	=	=	=	4
	CCW	DATA_A	4	=	=	=	7	=	=	=	4	=	=	=	0	=	=	=	$\overline{4}$	=	=	=	$\overline{7}$	=	=	=	$\overline{4}$	=	=	=	$\overline{0}$	=	=	=	4
		DATA_B	4	=	=	=	0	=	=	=	$\overline{4}$	=	=	=	$\overline{7}$	=	=	=	$\overline{4}$	=	=	=	$\overline{0}$	=	=	=	4	=	=	=	7	=	=	=	4
W1-2 Phase 1/4 Step	CW	DATA_A	4	=	2	=	$\overline{0}$	=	$\overline{2}$	=	$\overline{4}$	=	$\overline{6}$	=	$\overline{7}$	=	$\overline{6}$	=	$\overline{4}$	=	$\overline{2}$	=	0	=	2	=	4	=	6	=	7	=	6	=	4
		DATA_B	4	=	6	=	7	=	6	=	4	=	2	=	$\overline{0}$	=	$\overline{2}$	=	$\overline{4}$	=	$\overline{6}$	=	$\overline{7}$	=	$\overline{6}$	=	$\overline{4}$	=	$\overline{2}$	=	0	=	2	=	4
	CCW	DATA_A	4	=	6	=	7	=	6	=	4	=	2	=	0	=	$\overline{2}$	=	$\overline{4}$	=	$\overline{6}$	=	$\overline{7}$	=	$\overline{6}$	=	$\overline{4}$	=	$\overline{2}$	=	$\overline{0}$	=	2	=	4
		DATA_B	4	=	2	=	0	=	$\overline{2}$	=	$\overline{4}$	=	$\overline{6}$	=	$\overline{7}$	=	$\overline{6}$	=	$\overline{4}$	=	$\overline{2}$	=	$\overline{0}$	=	2	=	4	=	6	=	7	=	6	=	4
2W1-2 Phase 1/8 Step	CW	DATA_A	4	3	2	1	$\overline{0}$	$\overline{1}$	$\overline{2}$	$\overline{3}$	$\overline{4}$	$\overline{5}$	$\overline{6}$	$\overline{7}$	$\overline{7}$	$\overline{7}$	$\overline{6}$	$\overline{5}$	$\overline{4}$	$\overline{3}$	$\overline{2}$	$\overline{1}$	0	1	2	3	4	5	6	7	7	7	6	5	4
		DATA_B	4	5	6	7	7	7	6	5	4	3	2	1	$\overline{0}$	$\overline{1}$	$\overline{2}$	$\overline{3}$	$\overline{4}$	$\overline{5}$	$\overline{6}$	$\overline{7}$	$\overline{7}$	$\overline{7}$	$\overline{6}$	$\overline{5}$	$\overline{4}$	$\overline{3}$	$\overline{2}$	$\overline{1}$	0	1	2	3	4
	CCW	DATA_A	4	5	6	7	7	7	6	5	4	3	2	1	0	$\overline{1}$	$\overline{2}$	$\overline{3}$	$\overline{4}$	$\overline{5}$	$\overline{6}$	$\overline{7}$	$\overline{7}$	$\overline{7}$	$\overline{6}$	$\overline{5}$	$\overline{4}$	$\overline{3}$	$\overline{2}$	$\overline{1}$	0	1	2	3	4
		DATA_B	4	3	2	1	0	$\overline{1}$	$\overline{2}$	$\overline{3}$	$\overline{4}$	$\overline{5}$	$\overline{6}$	$\overline{7}$	$\overline{7}$	$\overline{7}$	$\overline{6}$	$\overline{5}$	$\overline{4}$	$\overline{3}$	$\overline{2}$	$\overline{1}$	$\overline{0}$	1	2	3	4	5	6	7	7	7	6	5	4

=: No output

■External Dimensions (DIP16)

(Unit : mm)

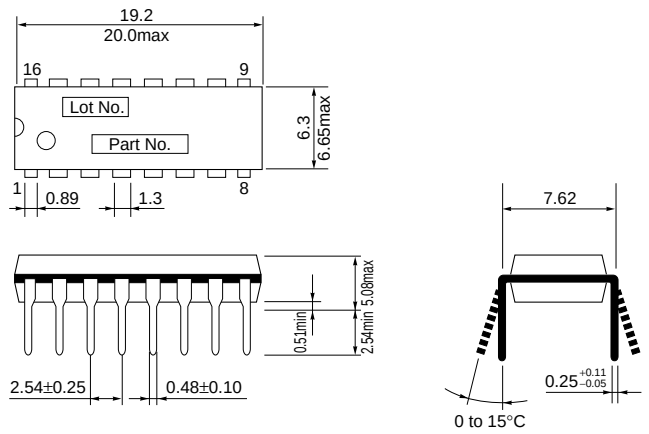

Product Mass : Approx.1g

SLA7611M Star Connection/Delta Connection

■Absolute Maximum Ratings

(T_a=25°C)

Parameter	Symbol	Ratings	Unit	Remarks
Main Supply Voltage	V_{BB}	36	V	
Logic Supply Voltage	V_{CC}	7	V	
Output Current	$I_{O\ (Ave)}$	3	A	
	$I_{O\ (Peak)}$	6	A	tw < 1ms
Logic Input Voltage	V_{IN}	–0.3 to V_{CC}+0.3	V	
REF Input Voltage	V_{REF}	–0.3 to V_{CC}+0.3	V	
PFD Input Voltage	V_{PFD}	–0.3 to V_{CC}+0.3	V	
Sense Voltage	V_{Rs}	–2 to 2	V	
Power Dissipation	P_D	4	W	Without heatsink
Junction Temperature	T_j	150	°C	
Operating Ambient Temperature	T_a	–20 to 85	°C	
Storage Temperature	T_{stg}	–30 to 150	°C	

■Recommended Operating Conditions

Parameter	Symbol	Ratings	Unit	Remarks
Main Supply Voltage	V_{BB}	10 to 30	V	
Logic Supply Voltage	V_{CC}	3 to 5.5	V	The VCC surge voltage should be 0.5V or lower.
REF Input Voltage	V_{REF}	0.2 to V_{CC}	V	The control current precision is degraded at 0.2V or lower.
Case Temperature	T_C	110max	°C	Temperature at Pin-10 Lead (without heatsink)

■Electrical Characteristics

(Ta=25°C, V_{BB}=24V, V_{CC}=5V, unless otherwise specified)

Parameter	Symbol	Ratings			Unit	Remarks
		min.	typ.	max.		
Main Supply Current	I_{BB}			20	mA	
Logic Supply Current	I_{cc}			10	mA	
Charge Pump Voltage	V_B		V_{BB}+5		V	
Output Withstand Voltage	V_O	36			V	
Output MOS FET ON Resistance (total of the upper and lower values)	$R_{DS\ (on)}$			0.8	Ω	I_{DS}=3A
Output MOS FET Diode Forward Voltage	V_{SD}			1.5	V	I_{SD}=3A
Logic Input Voltage	V_{IL}			V_{CC}×0.25	V	
	V_{IH}	V_{CC}×0.75			V	
Logic Input Current	I_{IL}		±1		μA	Excluding E_{na}
	I_{IH}		±1		μA	
Maximum Clock Frequency	F_{clock}			100	kHz	
PFD Input Current	I_{PFD}		±10		μA	
RC Terminal Inflow Current	I_{RC}		200		μA	
PFD Input Voltage	V_{PFDS}	1.7		V_{CC}	V	Slow Decay
	V_{PFDM}	0.7		1.3	V	Mixed Decay
	V_{PFDF}			0.3	V	Fast Decay
Sense Voltage	V_{Rs}		V_{REF}×0.2		V	Steady-state
REF Input Voltage	V_{REF}	0		V_{CC}	V	
REF Input Current	I_{REF}		±10		μA	
PWM OFF Time	T_{OFF}		1.1×R_t×C_t		μs	
Thermal Protection Circuit Activation Temperature	T_j		150		°C	
Hysteresis of Thermal Protection Circuit Activation Temperature	ΔT_j		10		°C	
Switching Time	T_{ONC}		2.5		μs	Clock→Out
	T_{OFFC}		2		μs	Clock→Out

■Internal Block Diagram

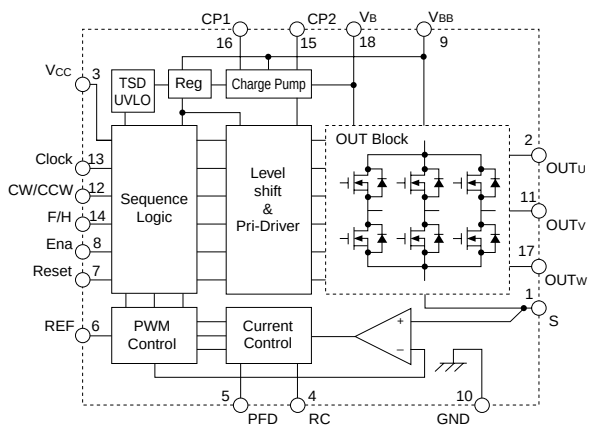

■Pin Assignment (Function Table)

Pin No.	Symbol	Function
1	Sense	Current sense
2	Out U	Phase U output
3	V_{CC}	Logic supply
4	RC	PWM OFF time setting
5	PFD	Mixed Decay ratio setting
6	REF	Control current setting
7	Reset	Internal logic reset
8	Ena	Output Enable/Disable control
9	V_{BB}	Main supply (motor supply)
10	GND	Device GND
11	Out V	Phase V output
12	CW/CCW	Forward/reverse control
13	Clock	Step Clock
14	Full/Half	Full/half step control
15	CP2	Charge pump capacitor 2
16	CP1	Charge pump capacitor 1
17	Out W	Phase W output
18	V_B	Boost charge pump

■Typical Connection Diagram

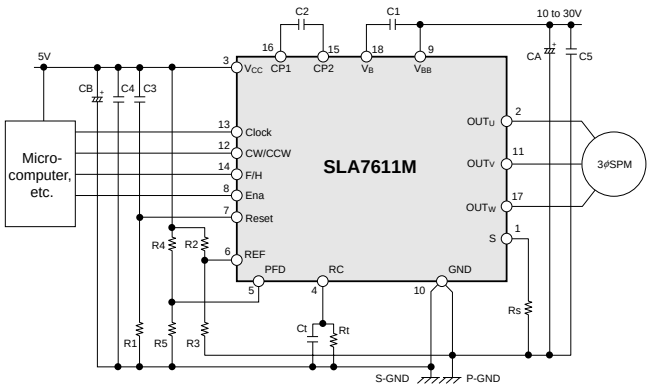

■External Dimensions (ZIP18 with Fin [SLA18Pin])

(Unit : mm)

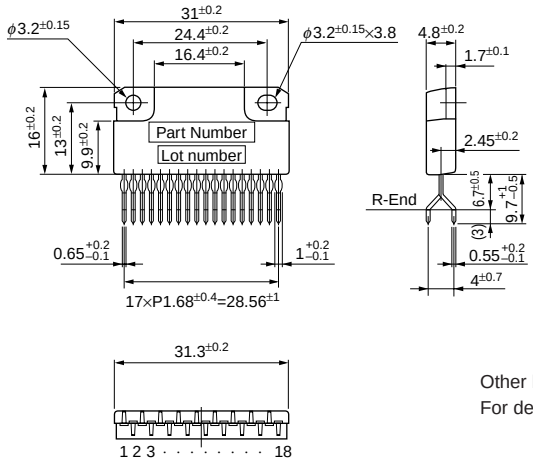

Other lead forming shapes are also available.
For details, contact our sales representative.

Forming No. No.871

Product Mass : Approx.6g

SI-7510 New Pentagon Connection

■Absolute Maximum Ratings

Parameter	Symbol	Ratings	Unit	Remarks
Main Supply Voltage	$V_{CC}1$	44	V	
Logic Supply Voltage	$V_{CC}2$	7	V	
Logic Input Voltage	V_{IN}	–0.3 to $V_{CC}2$	V	
REF Input Voltage	V_{REF}	–0.3 to $V_{CC}2$	V	
SENCE Input Voltage	V_{SENCE}	2	V	Except when tw<1µs
Charge Pump Output Voltage	V_{MC3}	48	V	
Power Dissipation	P_D	1.6	W	
Operating Ambient Temperature	T_a	–10 to 80	°C	
Storage Temperature	T_{stg}	–20 to 150	°C	
Junction Temperature	T_j	150	°C	

■Recommended Operating Ranges

Parameter	Symbol	Operating Ranges	Unit
Main Supply Voltage	$V_{CC}1$	10 to 42*	V
Logic Supply Voltage	$V_{CC}2$	3 to 5.5	V
REF Input Voltage	V_{REF}	0.1 to 1	V

*: Insert a 5V Zener diode between V_{CC1} and V_{MC3} when using with V_{CC1} of 35 V or more.

■Electrical Characteristics

(Ta=25°C, Vcc1=24V, VCC2=5V, unless otherwise specified)

Parameter	Symbol	Ratings			Unit	Conditions
		min.	typ.	max.		
Main Supply Current	$I_{CC}1$			25	mA	
Logic Supply Current	$I_{CC}2$			10	mA	
Logic Input Voltage	V_{IL}			1.25	V	
	V_{IH}	3.75			V	
Logic Input Current	I_{IL}	–20		20	µA	V_{IL}=0V
	I_{IH}	–20		20	µA	V_{IH}=5.5V
ENA Input Current	I_{ENA}	–100		20	µA	V_{ENA}=0V
REF Input Current	I_{REF}	–20		20	µA	V_{REF}=0 to 5.5V
SENCE Voltage	V_{SENCE}		1		V	V_{REF}=1V
SENCE Current	I_{SENCE}	–20		20	µA	V_{SENCE}=0V, 2V
MO Output Voltage	V_{MOL}			1	V	I_{MOL}=1mA
	V_{MOH}	4			V	I_{MOH}=–1mA
RC Pin Threshold Voltage	V_{RCL}		0.5		V	
	V_{RCH}		1.5		V	
RC Pin Outflow Current	I_{RC}		300		µA	V_{RC}=0V
Charge Pump Output Voltage	V_{MC3}		$V_{CC}1$+9		V	Without Zener diode
High Side Output Voltage (between gate sources)	V_{HGSL}			1	V	
	V_{HGSH}		8.5		V	
Low Side Output Voltage	V_{LGL}			1	V	
	V_{LGH}		7.5		V	
Maximum CL Frequency	fck	100			KHz	
Maximum Input CL Width (on)	T_{CON}	1			µs	
Power-on Reset time	PTW		1.5		µs	
Output Delay Time	TIO		2		µs	Against CL ↑
CW/CCW, F/H Input Data Setup Time	T_{ICS}	500			µs	
CW/CCW, F/H Input Data Hold Time	T_{ICH}	500			µs	

■Internal Block Diagram

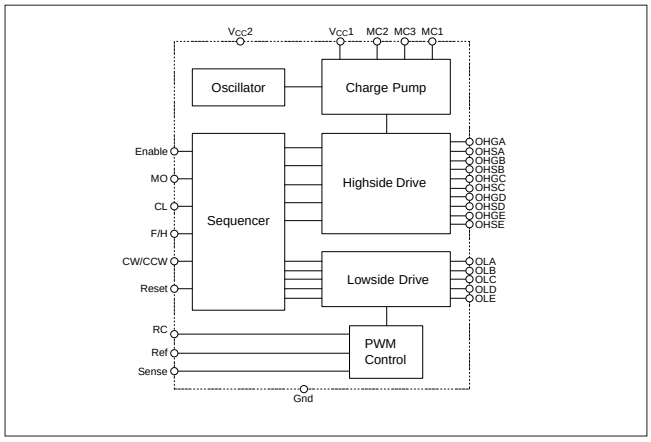

■Typical Connection Diagram

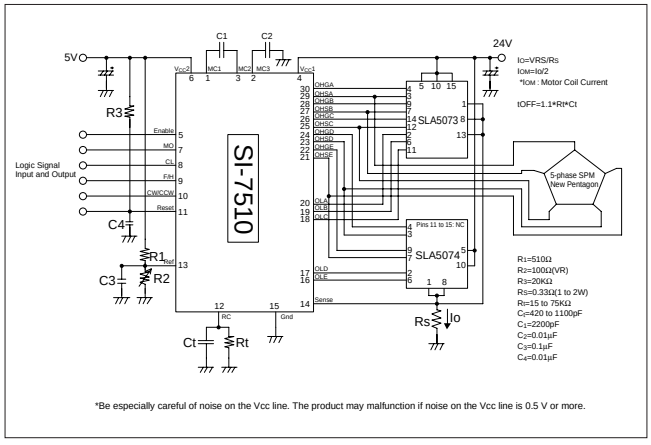

*Be especially careful of noise on the Vcc line. The product may malfunction if noise on the Vcc line is 0.5 V or more.

■Input and Output Timing Chart

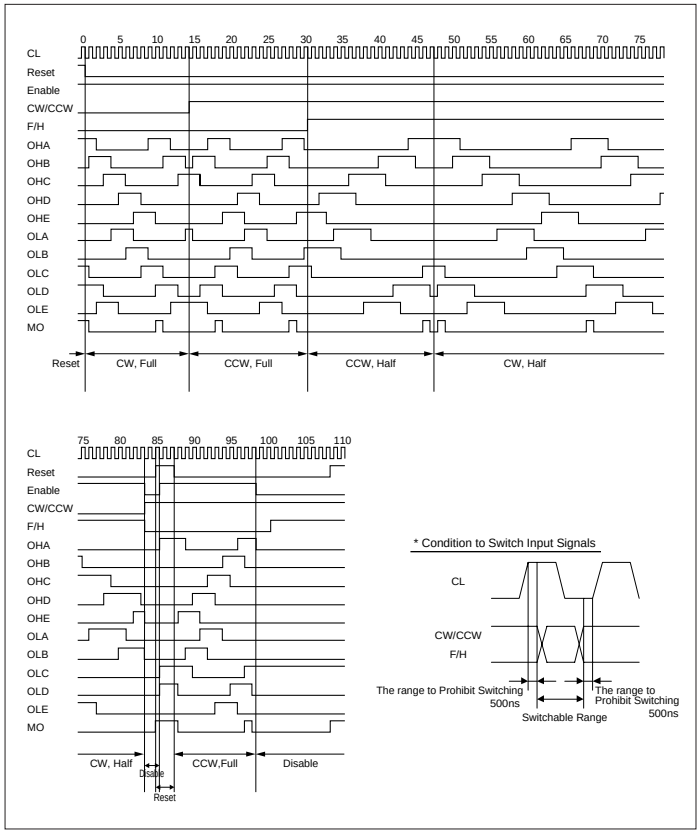

■Pin Assignment and Function Table

Pin No.	Symbol	Function
1	MC1	Capacitor Connection Terminal for Charge Pump (for MC2)
2	MC3	Capacitor Connection Terminal for Charge Pump (for Gnd)
3	MC2	Capacitor Connection Terminal for Charge Pump (for MC1)
4	$V_{CC}1$	Main Supply Voltage Input
5	Enable	Output OFF
6	$V_{CC}2$	Logic Voltage Input
7	MO	Monitor to Detect Motor Position
8	CL	Clock
9	F/H	4-phase, 4-5 phase switching
10	CW/CCW	Switching Between Forward and Backward Rotation
11	Reset	Reset
12	RC	RC Connection for Chopping Off Time Setting
13	Ref	Reference Voltage Input for Motor Current Setting
14	Sense	For Motor Current Detection
15	Gnd	Gnd
16	VOLE	Low Side MOSFET Gate Connection Pin (E-phase)
17	VOLD	Low Side MOSFET Gate Connection Pin (D-phase)
18	VOLC	Low Side MOSFET Gate Connection Pin (C-phase)
19	VOLB	Low Side MOSFET Gate Connection Pin (B-phase)
20	VOLA	Low Side MOSFET Gate Connection Pin (A-phase)
21	VOHSE	High Side MOSFET Source Connection Pin (E-phase)
22	VOHGE	High Side MOSFET Gate Connection Pin (E-phase)
23	VOHSD	High Side MOSFET Source Connection Pin (D-phase)
24	VOHGD	High Side MOSFET Gate Connection Pin (D-phase)
25	VOHSC	High Side MOSFET Source Connection Pin (C-phase)
26	VOHGC	High Side MOSFET Gate Connection Pin (C-phase)
27	VOHSB	High Side MOSFET Source Connection Pin (B-phase)
28	VOHGB	High Side MOSFET Gate Connection Pin (B-phase)
29	VOHSA	High Side MOSFET Source Connection Pin (A-phase)
30	VOHGA	High Side MOSFET Gate Connection Terminal (A-phase)

■Truth Table

Pin Name	Low Level	High Level
Clock		Positive Edge
CW/CCW	Forward Rotation (CW)	Backward Rotation (CCW)
Full/Half	4-phase excitation	4-5 phase excitation
Enable	Disable	Enable
Reset	Enable	Reset

■External Dimensions (DIP30)

(Unit : mm)

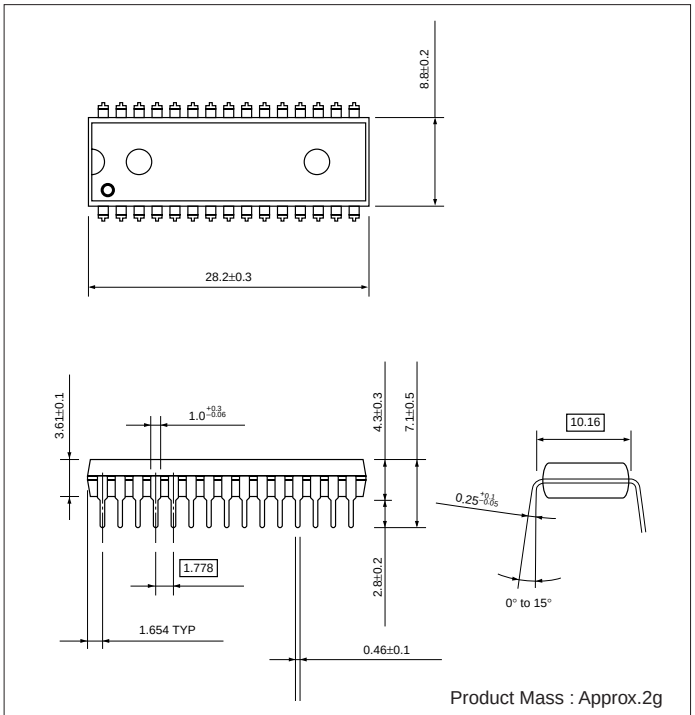

Product Mass : Approx.2g

STA6940M

■Features

- Output current: 4A (peak: 8A)
- Power supply voltage: V_{BB} = 10 to 40V
- Logic supply voltage: V_{DD} = 3.0 to 5.5V
- Built-in UVLO, OCP, and TSD protection
- Built-in diag output function
- STA 18-pin package

■Absolute Maximum Ratings

Parameter	Symbol	Ratings	Unit	Conditions
Driver Supply Voltage	V_{BB}	44	V	
Logic Supply Voltage	V_{DD}	6	V	
Output Current	Io	8	A	100μs or less
Logic Input Voltage	V_{IN}	–0.3 to V_{DD}+0.3	V	
PWM REF Input Voltage	V_{PREF}	–0.3 to V_{DD}+0.3	V	
OCP REF Input Voltage	V_{OREF}	–0.3 to V_{DD}+0.3	V	
Sense Voltage	V_{RS}	–1 to 2	V	
Power Dissipation	P_D	2.7	W	DC control (Ta = 25°C)
		3.0	W	PWM control (Ta = 25°C) at Slow Decay
		3.2	W	PWM control (Ta = 25°C) at Fast Decay
Junction Temperature	Tj	150	°C	
Operating Ambient Temperature	Ta	–20 to 85	°C	
Storage Temperature	Tstg	–30 to 150	°C	

*: Output current value may be limited, depending on the duty ratio, ambient temperature, and heating conditions. Do not exceed junction temperature of Tj under any circumstances.

■Recommended Operating Conditions

Parameter	Symbol	Ratings		Unit	Conditions
		min.	max.		
Main Supply Voltage	V_{BB}	10	40	V	
Output Current	Io		4.0	A	
Logic Supply Voltage	V_{DD}	3.0	5.5	V	
PWM REF Input Voltage	V_{PREF}		1	V	When operating current control
OCP REF Input Voltage	V_{OREF}		2	V	When operating overcurrent control
Case Temperature	Tc		85	°C	Rear center (without Fin)

■Electrical Characteristics

(V_{DD}=5V, V_{BB}=24V, T_a=25°C, unless otherwise specified)

Parameter	Symbol	Ratings			Unit	Concitions
		min.	typ.	max.		
Main Supply Current	I_{BB}			20	mA	In operation
Logic Supply Current	I_{DD}			5	mA	
Charge Pump Voltage	Vcp		V_{BB}+5		V	V_{BB}=10V to 40V
Charge Pump Oscillation Frequency	Fcp		360		kHz	
Low Driver Supply Voltage Protection Voltage	V_{UVB}L		7		V	
	V_{UVB}H		7.8		V	
Low Logic Supply Voltage Protection Voltage	V_{UVD}L		2.3		V	
	V_{UVD}H		2.5		V	
Low Charge Pump Voltage Protection Voltage	V_{UVC}L		3.8		V	against V_{BB}
	V_{UVC}H		4		V	
Output MOSFET Breakdown Voltage	$V_{(BR)DS}$	53			V	I_D=250μA
Output MOSFET ON Resistance	$R_{DS(ON)}$		0.1	0.13	Ω	I_D=4.0A
Output MOSFET Diode Forward Voltage	V_F		0.95	2.1	V	I_F=4.0A
Logic Input Voltage	V_{LIL}			0.25V_{DD}	V	
	V_{LIH}	0.75V_{DD}			V	
Logic Input Current	I_{LIL}		±1		μA	
	I_{LIH}		±1		μA	
Maximum Logic Input Clock Frequency	fclk	100			kHz	duty=50%
PWM REF Input Voltage	V_{PREF}	0.1		1	V	When controlling the current
PWM REF Input Current	I_{PREF}		±10		μA	V_{REF}=0 to V_{DD}
OCP REF Input Voltage	V_{OREF}	0.1		2	V	When controlling the current
OCP REF Input Current	I_{OREF}		±10		μA	V_{REF}=0 to V_{DD}
PWM Sense Voltage	V_{PSEN}	V_{PREF} –0.045	V_{PREF} –0.015	V_{PREF} +0.015	V	
Overcurrent Sense Voltage	V_{OSEN}	V_{OREF} –0.045	V_{OREF} –0.015	V_{OREF} +0.015	V	
Sense Input Current	I_{SENSE}		±20		μA	
Diag Output Voltage	V_{LOL}			1.25	V	I_{LOL}=1.25mA
	V_{LOH}	V_{DD}–1.25			V	I_{LOL}=–1.25mA
Diag Output Current	I_{LOL}			1.25	mA	V_{LOL}=1.25V
	I_{LOH}	–1.25			mA	V_{LOH}=V_{DD}-1.25
Diag Output Frequency	f_{DIAG}		90		kHz	
PWM Minimum ON Time	tpon(min)		5		μs	During PWM operation
PWM OFF Time	t_{POFF}		35		μs	
OCP Minimum ON Time	toon(min)		5		μs	During OCP operation
OCP OFF Time	t_{OOFF}		142		μs	
Crossover Current Delay Time	t_{COCD}	150		750	ns	
Switching Time	tcon		3		μs	IN→Out ON
	tcoff		2.7		μs	IN→Out OFF
Thermal Protection Activation Temperature	Ttsdon		140		°C	Temperature of rear of package (at saturation)
Thermal Protection Deactivation Temperature	Ttsdoff		115		°C	

■Internal Block Diagram

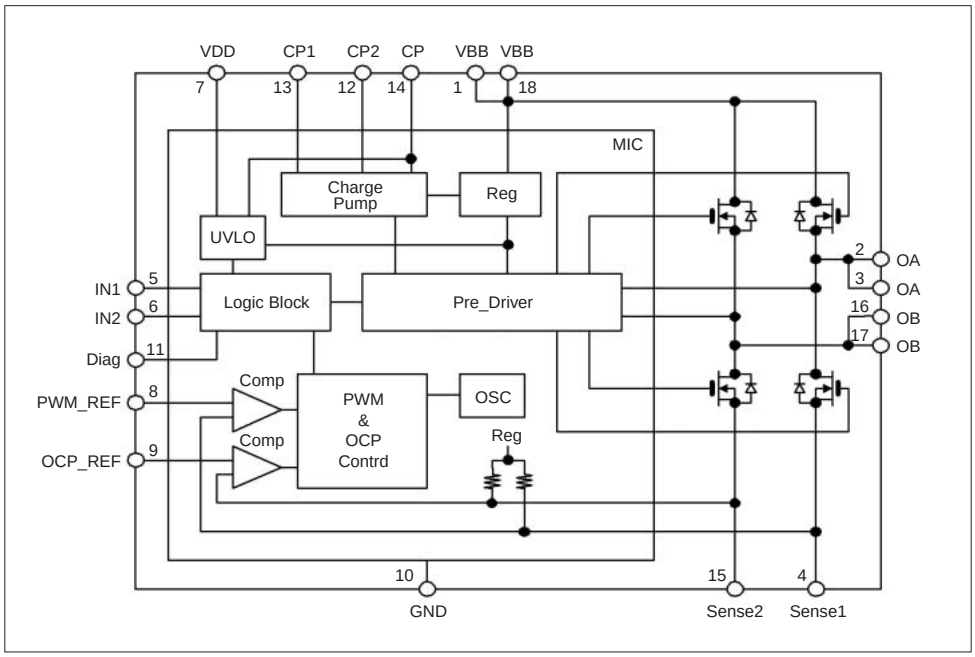

■Pin Assignment

Pin No.	Symbol	Function
1	V_{BB}	Main supply
2,3	OA	Output terminal A
4	Sense 1	Constant current sense terminal
5	IN1	Output setting terminal
6	IN2	
7	V_{DD}	Logic supply
8	PWM_REF	Constant current setting input terminal
9	OCP_REF	Overcurrent setting input terminal
10	Gnd	Device Gnd
11	Diag	Monitor terminal
12	CP2	Capacitor connection terminal for charge pump
13	CP1	
14	CP	
15	Sense 2	Overcurrent sense terminal
16,17	OB	Output terminal B
18	V_{BB}	Driver supply

■Typical Connection Diagram

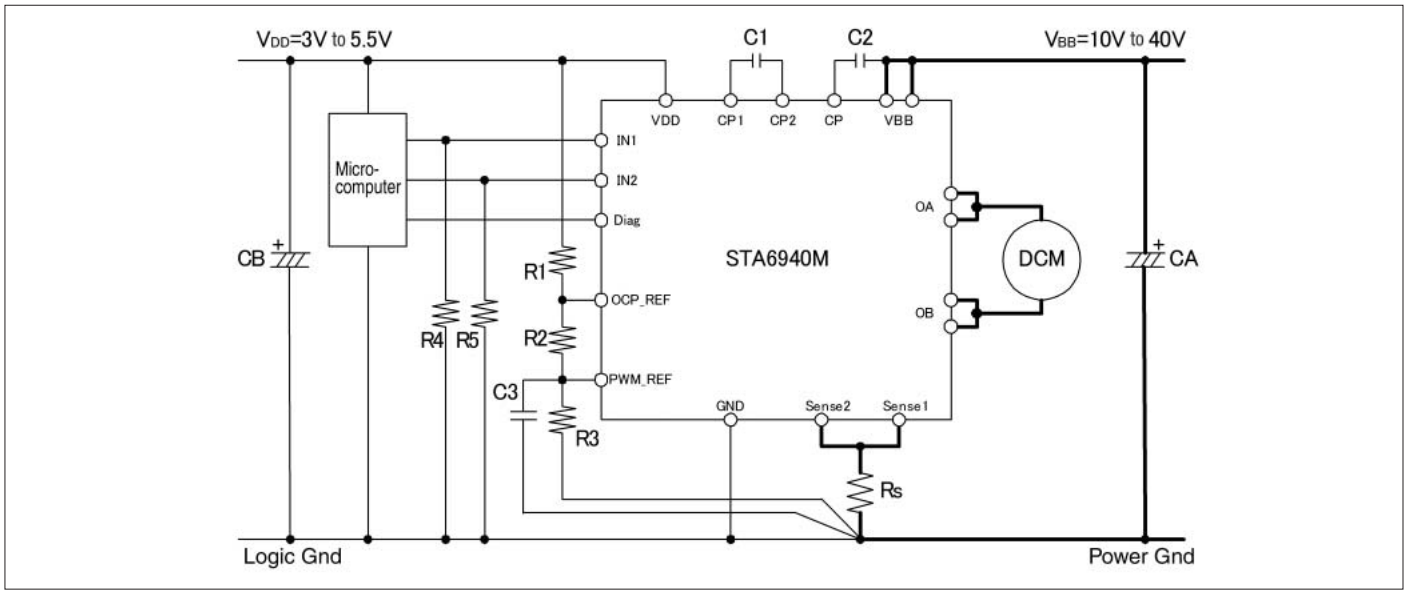

■External Dimensions (ZIP18 [STA18Pin])

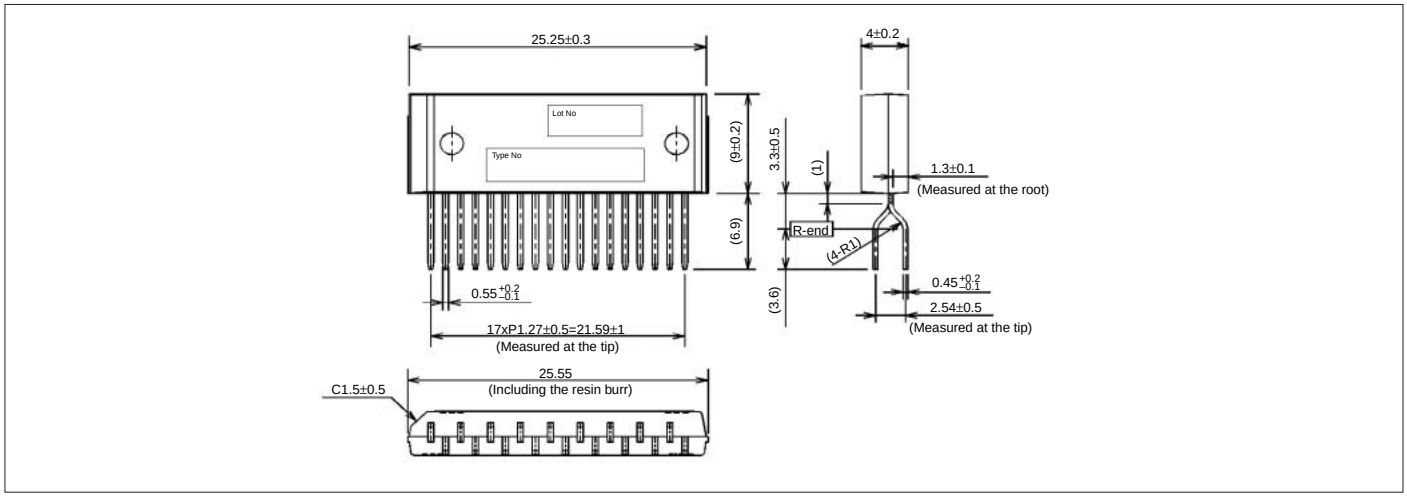

SPI-6631M

■Features

- Power supply voltages, VBB: 13 V to 33 V
- Signal power supply configuration
- Output current Iout: 3 A (max)... repetitive current (normal-operation current)
- Built-in current regeneration diode
- Built-in UVLO, TSD and OCP protection
- Built-in dead time function that prevents through current upon phase switching
- Built-in error sense flag output
- HSOP16-pin package

■Absolute Maximum Ratings

Parameter	Symbol	Ratings	Unit	Conditions
Main Supply Voltage	V_{BB}	35	V	
MOSFET Output Breakdown Voltage	V_{DSS}	35	V	DutyCycle=100%*
Output Current	Iout	±3	A	
Input Voltage	VIN	–0.3 to 6.5	V	
S Terminal Voltage	Vsen	–2 to 2	V	
Alarm Terminal Voltage	Valarm	6.5	V	
Alarm Input Current	Ialarm	1	mA	
Power Dissipation	P_D	2.67	W	When using a Sanken evaluation board
Junction Temperature	Tj	150	°C	
Storage Temperature	Tstg	–30 to 150	°C	
Operating Ambient Temperature	Ta	–20 to 85	°C	

*: Output current value may be limited, depending on the duty ratio, ambient temperature, and heating conditions. Do not exceed the rated current or maximum junction temperature (Tj = 150°C).

■Electrical Characteristics

(Ta=25°C, V_{BB}=24V, unless otherwise specified)

Parameter	Symbol	Ratings			Unit	Conditions
		min.	typ.	max.		
Main Supply Voltage	V_{BB}	13	–	33	V	In operation
Main Supply Current	I_{BB}	–	–	20	mA	
Maximum Clock Pulse Width	t_w	–	–	3	μs	
Input Voltage	V_{IL}	–	–	0.8	V	
	V_{IH}	2.0	–	–	V	
Input Current	I_{IL}	–	±8	–	μA	$V_{IN(0)}$, V_{IN}=0.8V
	I_{IH}	–	±20	–	μA	$V_{IN(1)}$, V_{IN}=2.0V
Crossover Dead Time	T_{delay}	100	500	1200	ns	
VB Terminal Breakdown Voltage	V_B	–	V_{BB}+5	–	V	Breakdown voltage between VB and GND
VB-OUT Breakdown Voltage	$V_{B\text{-}OUT}$	–	5	–	V	
VB Terminal Current	I_B	–	–	3	mA	VB-OUT=5V
Output Leakage Current	I_{DSS}	–	–	800	μA	V_{OUT}=V_{BB}=35V
		–800	–	–	μA	V_{OUT}=0V
MOSFET ON Resistance	$R_{DS(ON)}$	–	0.4	0.7	Ω	I_{OUT}=-1A, Between VBB and OUT I_{OUT}=1A, Between IOUT and S
MOSFET Diode Forward Voltage	V_{SD}	–	–	2.2	V	I_{SD}=1A
Overcurrent Sense Current	I_{OCP}	7	–	–	A	Short between Out and Out
Overcurrent Protection Blank Time	tblank	0.7	1.2	4	μs	
Overcurrent Protection Delay Time	tocp	0.5	1	2.2	ms	
Thermal Protection Operation Temperature	T_J	–	170	–	°C	
Thermal Protection Hysteresis	ΔT_J	–	15	–	°C	
Low Voltage Protection Operation Voltage	UVLO	4.0	4.5	5.0	V	V_{BB} voltage
Low Voltage Protection Hysteresis	ΔUVLO	0.4	0.45	0.5	V	
Alarm Output Voltage	V_{Alarm}	–	–	0.5	V	I=1mA

■Internal Block Diagram

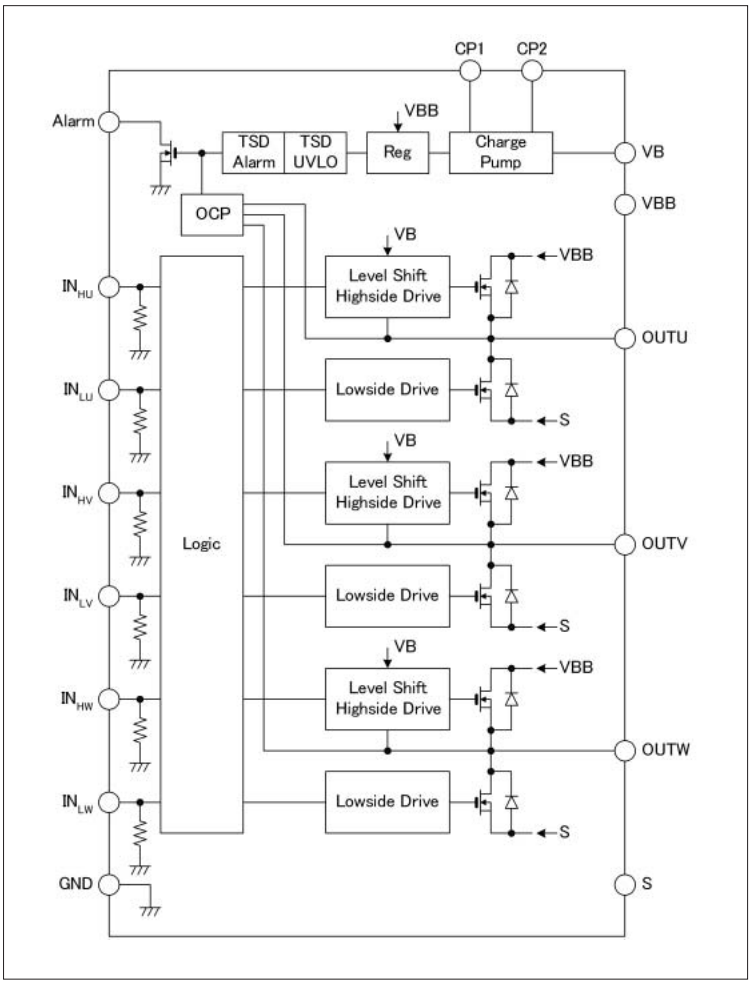

■Pin Assignment

Pin No.	Symbol	Function
1	CP2	Capacitor terminal for charge pumping 2
2	CP1	Capacitor terminal for charge pumping 1
3	OUTU	DMOSFET phase U output
4	S	Sense terminal (lower arm source output)
5	OUTV	DMOSFET phase V output
6	OUTW	DMOSFET phase W output
7	Alarm	Alarm output
8	GND	Ground
9	IN_{LW}	Phase W lower arm input
10	IN_{HW}	Phase W upper arm input
11	IN_{LV}	Phase V lower arm input
12	IN_{HV}	Phase V upper arm input
13	VBB	Driver supply terminal
14	IN_{LU}	Phase U lower arm input
15	IN_{HU}	Phase U upper arm input
16	VB	Capacitor terminal for charging up charge pump

■External Dimensions (HSOP16)

(Unit : mm)

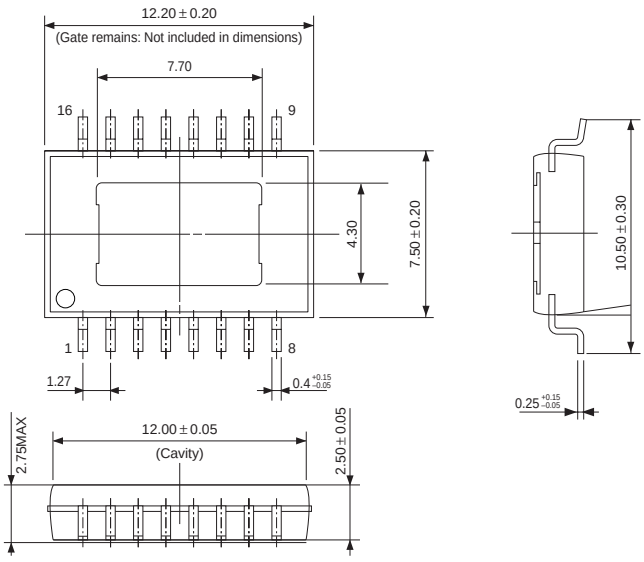

Product Mass : Approx.0.56g

SX68000M Series

■Features

- A package of 6 MOSFET units for 3-phase bridge and pre-drive (HVIC, LVIC)
- Best for driving the fan motor (built-in motor) of air conditioner, etc.
- Built-in boot diode with limited resistance
- Built-in undervoltage lock out (UVLO) circuit
- Built-in overcurrent protection circuit (OCP)
- Built-in Thermal Shut Down (TSD) function
- Built-in current limiter function (OCL)
- Error (FO) terminal with shutdown input function
- 7.5V regulator output function (35mA max.)

■Absolute Maximum Ratings

(T_a=25°C)

Parameter	Symbol	Ratings			Unit	Conditions
		SX68001M	SX68002M	SX68003M		
MOSFET Output Breakdown Voltage	V_{DSS}	250	500	500	V	V_{CC}=15V,VIN=0V
Control Supply Voltage	V_{CC}	20	20	20	V	Between V_{CC} and COM
Control Supply Voltage (Bootstrap)	V_{BS}	20	20	20	V	Between VB and HS (U, V, W)
Output Current (continuous)	I_o	2.0	1.5	2.5	A	
Output Current (pulse)	I_{op}	3.0	2.25	3.75	A	PW≤100μs, duty=1%
Input Voltage	V_{IN}	–0.5 to +7	–0.5 to +7	–0.5 to +7	V	
Power Dissipation	P_D	3	3	3	W	Ta=25℃
Thermal Resistance (Junction to Case)	$\theta_{j\text{-}c}$	15	15	15	°C/W	All element operation
Thermal Resistance (Junction to Ambient Air)	$\theta_{j\text{-}a}$	41.7	41.7	41.7	°C/W	All element operation
Operating Case Temperature	T_{op}	–20 to +100	–20 to +100	–20 to +100	°C	
Junction Temperature (Power part)	T_{ch}	+150	+150	+150	°C	
Storage Temperature	T_{stg}	–40 to +150	–40 to +150	–40 to +150	°C	

■Recommended Operating Conditions

Parameter	Symbol	Ratings									Unit	Condotions
		SX68001M			SX68002M			SX68003M				
		min.	typ.	max.	min.	typ.	max.	min.	typ.	max.		
Main Supply Voltage	V_{BB}	–	140	200	–	280	400	–	280	400	V	Between V_{BB} and LS
Control Supply Voltage	Vcc	13.5	–	16.5	13.5	–	16.5	13.5	–	16.5	V	Between V_{CC} and COM
Input Signal Dead Time	tdead	1.5	–	–	1.5	–	–	1.5	–	–	μs	
Minimum Input Pulse Width	tw	0.5	–	–	0.5	–	–	0.5	–	–	μs	
Junction Temperature	Tj	–	–	125	–	–	125	–	–	125	°C	

■Electrical Characteristics

Parameter	Symbol	Ratings									Unit	Condotions
		SX68001M			SX68002M			SX68003M				
		min.	typ.	max.	min.	typ.	max.	min.	typ.	max.		
Control Supply Voltage	Vcc	13.5	15	16.5	13.5	–	16.5	13.5	–	16.5	V	Between V_{CC}1,2 and COM1,2
Control Supply Current	Icc	–	4.6	7.4	–	4.6	7.4	–	4.6	7.4	mA	V_{CC}1,2=15V
Boot Supply Current	Ibs	–	140	280	–	140	280	–	140	280	μA	V_B・HS=15V
Input Voltage	V_{IH}	–	2.0	2.5	–	2.0	2.5	–	2.0	2.5	V	Vcc=15V, Output:ON
	V_{IL}	1.0	1.5	–	1.0	1.5	–	1.0	1.5	–		Vcc=15V, Output:OFF
Input Voltage Hysteresis Width	V_H	–	0.5	–	–	0.5	–	–	0.5	–	V	Vcc=15V
Input Current	I_{IH}	–	230	500	–	230	500	–	230	500	μA	Vcc=15V, V_{IN}=5V
Undervoltage Lock Out (high side)	V_{UVHL}	9.0	–	11.0	9.0	–	11.0	9.0	–	11.0	V	Vcc=15V
	V_{UVHH}	9.5	–	11.5	9.5	–	11.5	9.5	–	11.5		
Undervoltage Lock Out (low side)	V_{UVLL}	10.0	–	12.0	10.0	–	12.0	10.0	–	12.0	V	
	V_{UVLH}	10.5	–	12.5	10.5	–	12.5	10.5	–	12.5		
FO Terminal Output Voltage	V_{FOL}	–	–	0.5	–	–	0.5	–	–	0.5	V	Vcc=15V, V_{FO}=5V, R_{FO}=10kΩ
	V_{FOH}	4.8	–	–	4.8	–	–	4.8	–	–		
OCL Output Voltage	V_{OCLL}	–	–	0.5	–	–	0.5		–	0.5	V	Vcc=15V
	V_{OCLH}	4.5	–	5.5	4.5	–	5.5	4.5	–	5.5		
Current Limiter Reference Voltage	V_{LIM}	0.6175	0.65	0.6825	0.6175	0.65	0.6825	0.6175	0.65	0.6825	V	Vcc=15V
Overcurrent Protection Trip Voltage	V_{TRIP}	0.9	1.0	1.1	0.9	1.0	1.1	0.9	1.0	1.1	V	Vcc=15V
Overcurrent Protection Retention Time	tp	20	25	–	20	25	–	20	25	–	μs	Vcc=15V
OCP Blanking Time	tbk(ocp)	–	2	–	–	2	–	–	2	–	μs	Vcc=15V
SD Terminal Blanking Time	tbk(ocl)	–	3.3	–	–	3.3	–	–	3.3	–	μs	Vcc=15V
Thermal Protection and Release Threshold	T_{DH}	135	150	165	135	150	165	135	150	165	°C	Vcc=15V
	T_{DL}	105	120	135	105	120	135	105	120	135		
	T_{Dhys}	–	30	–	–	30	–	–	30	–		
Regulator Output Voltage	V_{REG}	6.75	7.5	8.25	6.75	7.5	8.25	6.75	7.5	8.25	V	I_{REG}=35mA
MOSFET Output Breakdown Voltage	V_{DSS}	250	–	–	500	–	–	500	–	–	V	Vcc=15V, I_D=100μA, V_{IN}=0V
MOSFET Output Leakage Current	I_{DSS}	–	–	100	–	–	100	–	–	100	μA	Vcc=15V, V_{DS}=500V(250 V forSX68001M), V_{IN}=0V
MOSFET DC ON Resistance	$R_{DS(ON)}$	–	1.25	1.5	–	3.2	4.0	–	2.0	2.4	Ω	Vcc=15V, I_D=1A(0.75 A for SX68002M or 1.5 A for SX68003M), V_{IN}=5V
Diode Forward Voltage	V_{SD}	–	1.1	1.5	–	1.0	1.5	–	1.0	1.5	V	Vcc=15V, I_{SD}=1A(0.75 A for SX68002M or 1.5 A for SX68003M), V_{IN}=0V
Boot Diode Leakage Current	I_{IB}	–	–	10	–	–	10	–	–	10	μA	V_R=500V(250 V for SX68001M)
Boot Diode Forward Voltage	V_{FB}	–	1.0	1.3	–	1.0	1.3	–	1.0	1.3	V	I_F=0.15A
Boot Diode Reverse Recovery Time	trr	–	70	–	–	70	–	–	70	–	ns	I_F/I_{RP}=100mA/100mA
Boot Diode Series Resistance	R_B	48	60	72	48	60	72	48	60	72	Ω	
High Side Switching Time	td(on)	–	800	–	–	810	–	–	940	–	ns	V_{DC}=300V(150V for SX68001M), Vcc=15V, I_D=1A(0.75 A for SX68002M or 1.5 A for SX68003M), HIN=0 to 5V, Inductive load
	tr	–	45	–	–	60	–	–	100	–		
	trr	–	75	–	–	120	–	–	135	–		
	td(off)	–	720	–	–	815	–	–	975	–		
	tf	–	40	–	–	38	–	–	45	–		
Low Side Switching Time	td(on)	–	750	–	–	760	–	–	900	–	ns	
	tr	–	53	–	–	58	–	–	105	–		
	trr	–	70	–	–	110	–	–	135	–		
	td(off)	–	660	–	–	750	–	–	905	–		
	tf	–	20	–	–	32	–	–	35	–		

■Internal Block Diagram

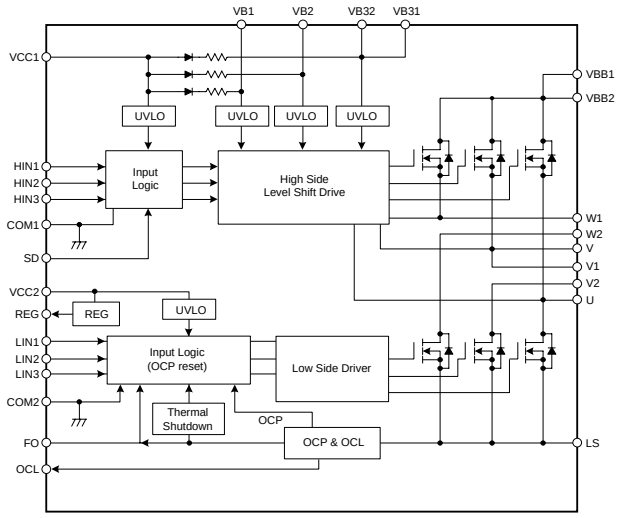

■Typical Connection Diagram

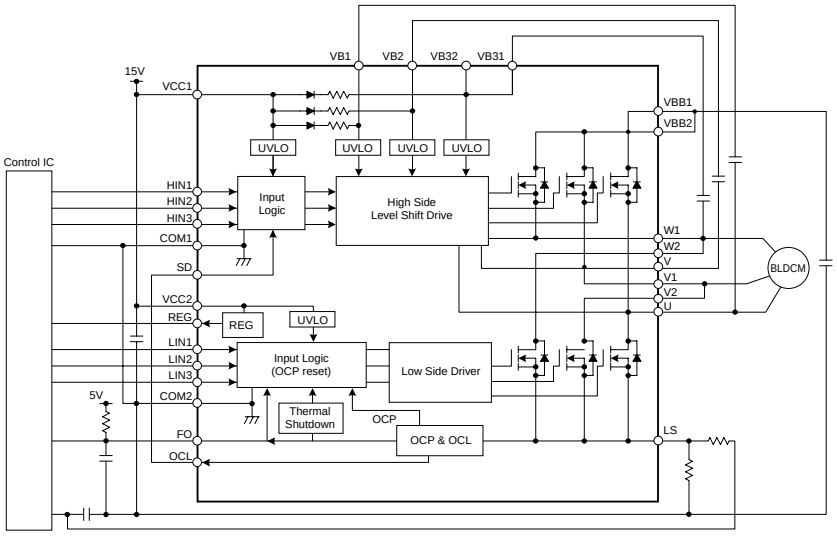

■External Dimensions (SOP27)

(Unit : mm)

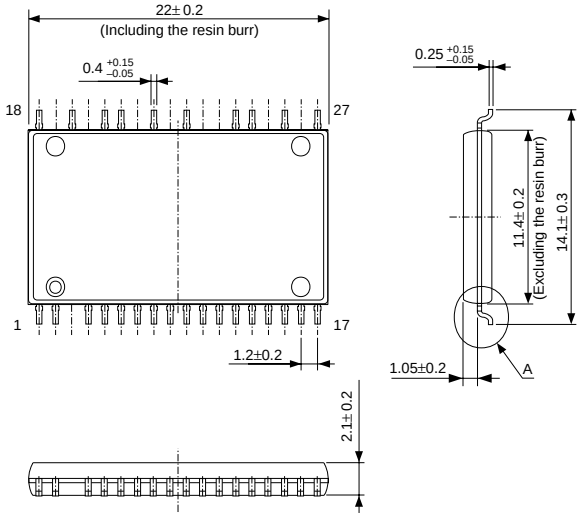

Product Mass : Approx.3.9g

SMA6820MP Series/SLA6820M Series

■Features

- A package of 6 MOSFET units for 3-phase bridge, pre-drive (HVIC, LVIC) and boot diode
- Best for fan motor inverter control
- High side drive of bootstrap method has been employed.
- Built-in undervoltage lock out (auto regression)
- Built-in Thermal detection circuit (no stopping)
- Built-in fail signal output function (for when the overheat detection circuit and UVLO)
- Built-in 7.5 V regulator output (35 mA, max.)

■Absolute Maximum Ratings

(T_a=25°C)

Parameter	Symbol	Ratings			Unit	Conditions
		SMA6821MP/SLA6826M	SMA6822MP/SLA6827M	SMA6823MP/SLA6828M		
MOSFET Output Withstand Voltage	VDSS	250	500	500	V	Vcc=15V,VIN=0V
Control Supply Voltage	Vcc	20	20	20	V	Between V_{CC} and COM
Control Supply Voltage (bootstrap)	V_{BS}	20	20	20	V	Between VB and HS (U, V, W)
Output Current (continuous)	Io	2.0	1.5	2.5	A	
Output Current (pulse)	Iop	4	3	5	A	PW≤100µs, duty=1%
Regulator Output Current	IREG	35	35	35	mA	
Input Voltage	V_{IN}	–0.5 to +7	–0.5 to +7	–0.5 to +7	V	
Power Dissipation	P_D	28/32.8	28/32.8	28/32.8	W	Tc=25°C
Thermal Resistance (Junction to Case)	θj–c	4.46/3.8	4.46/3.8	4.46/3.8	C°/W	When all elements operating
Thermal Resistance (Junction to Ambient Air)	θj–a	31.25/27.7	31.25/27.7	31.25/27.7	C°/W	When all elements operating
Operating Case Temperature	Top	–20 to +100	–20 to +100	–20 to +100	C°	
Junction Temperature (Power part)	Tch	+150	+150	+150	C°	
Storage Temperature	Tstg	–40 to +150	–40 to +150	–40 to +150	C°	

■Recommended Operating Conditions

Parameter	Symbol	Ratings									Unit	Conditions
		SMA6821MP/SLA6826M			SMA6822MP/SLA6827M			SMA6823MP/SLA6828M				
		min.	typ.	max.	min.	typ.	max.	min.	typ.	max.		
Main Supply Voltage	V_{BB}	–	140	200	–	280	400	–	280	400	V	Between V_{BB} and LS
Control Supply Voltage	Vcc	13.5	–	16.5	13.5	–	16.5	13.5	–	16.5	V	Between V_{CC} and COM
Input Signal Dead Time	tdead	1.5	–	–	1.5	–	–	1.5	–	–	µs	
Minimum Input Pulse Width	tw	0.5	–	–	0.5	–	–	0.5	–	–	µs	
Junction Temperatur	Tj	–	–	125	–	–	125	–	–	125	°C	

■Electrical Characteristics

Parameter	Symbol	Ratings									Unit	Conditions
		SMA6821MP/SLA6826M			SMA6822MP/SLA6827M			SMA6823MP/SLA6828M				
		min.	typ.	max.	min.	typ.	max.	min.	typ.	max.		
Control Supply Voltage	Vcc	13.5	15	16.5	13.5	15	16.5	13.5	15	16.5	V	Between V_{CC} and COM
Control Supply Current	Icc	–	4	6	–	4	6	–	4	6	mA	Vcc=15V
Input Voltage	V_{IH}	–	2	2.5	–	2	2.5	–	2	2.5	V	Vcc=15V, Output:ON
	V_{IL}	1	1.5	–	1	1.5	–	1	1.5	–		Vcc=15V, Output:OFF
Input Voltage Hysteresis Width	V_{Ihys}	–	0.5	–	–	0.5	–	–	0.5	–	V	Vcc=15V
Input Current	I_{IH}	–	50	100	–	50	100	–	50	100	µA	Vcc=15V, VIN=5V
	I_{IL}	–	–	2	–	–	2	–	–	2		Vcc=15V, VIN=0V
Undevoltage Lock Out (high side)	V_{UVHL}	9.0	10.0	11.0	9.0	10.0	11.0	9.0	10.0	11.0	V	Between V_B and U (V, W)
	V_{UVHH}	9.5	10.5	11.5	9.5	10.5	11.5	9.5	10.5	11.5		
	V_{UVhys}	–	0.5	–	–	0.5	–	–	0.5	–		
Undevoltage Lock Out (low side)	V_{UVLL}	10.0	11.0	12.0	10.0	11.0	12.0	10.0	11.0	12.0	V	Between V_{CC} and COM
	V_{UVLH}	10.5	11.5	12.5	10.5	11.5	12.5	10.5	11.5	12.5		
	V_{UVhys}	–	0.5	–	–	0.5	–	–	0.5	–		
FO Pin Output Voltage	V_{FOL}	0	–	1.0	0	–	1.0	0	–	1.0	V	Vcc=15V
	V_{FOH}	4.0	–	5.5	4.0	–	5.5	4.0	–	5.5		
Overheat detection threshold	T_{DH}	135	150	165	135	150	165	135	150	165	°C	Vcc=15V
Overheat detection release threshold	T_{DL}	105	120	135	105	120	135	105	120	135		
Regulator output voltage	V_{REG}	6.75	7.5	8.25	6.75	7.5	8.25	6.75	7.5	8.25	V	I_{REG}=35mA
Boot Diode Forward Voltage	V_{FBD}	–	1.1	1.3	–	1.1	1.3	–	1.1	1.3	V	I_F=0.15A
Boot Diode Series Resistance	R_{BD}	–	22	–	–	22	–	–	22	–	Ω	
MOSFET Output Withstand Voltage	V_{DSS}	250	–	–	500	–	–	500	–	–	V	Vcc=15V, I_D=100µA, V_{IN}=0V
MOSFET Output Leakage Current	I_{DSS}	–	–	100	–	–	100	–	–	100	µA	Vcc=15V, V_{DS}=500V (250V for SMA6821MP/SLA6826M), V_{IN}=0V
MOSFET DC On Resistance	$R_{DS(ON)}$	–	1.4	1.8	–	3.6	4.0	–	2.0	2.4	Ω	Vcc=15V, I_D=1.5A (1.0A for SMA6822MP/SLA6827M), V_{IN}=5V
Diode Forward Voltage	V_{SD}	–	1.0	1.5	–	1.0	1.5	–	1.0	1.5	V	Vcc=15V, I_D=1.5A (1.0A for SMA6822MP/SLA6827M), V_{IN}=0V
Diode Reverse Recovery Time	trr	–	50	–		75			75		ns	di/dt=100A/µs
High Side Switching Time	td(on)	–	650	–	–	550	–	–	650	–	ns	V_{DC}=280V, Vcc=15V, V_{IN}=0 to 5V, Inductive load I_D=1.5A (1.0A for SMA6822MP/SLA6827M)
	tr	–	100	–	–	100	–	–	100	–		
	td(off)	–	370	–	–	420	–	–	520	–		
	tf	–	10	–	–	30	–	–	50	–		
Low Side Switching Time	td(on)	–	600	–	–	570	–	–	700	–	ns	
	tr	–	100	–	–	100	–	–	100	–		
	td(off)	–	300	–	–	450	–	–	580	–		
	tf	–	10	–	–	30	–	–	40	–		

■Internal Block Diagram

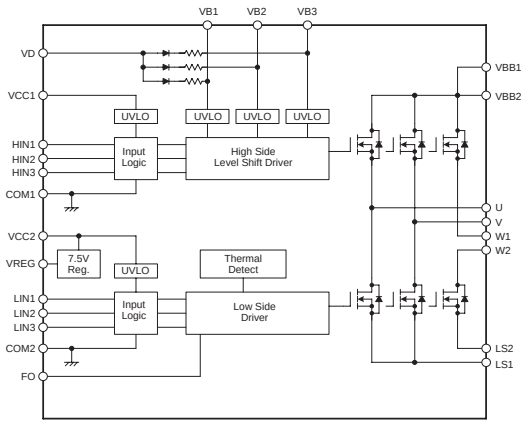

■Typical Connection Diagram

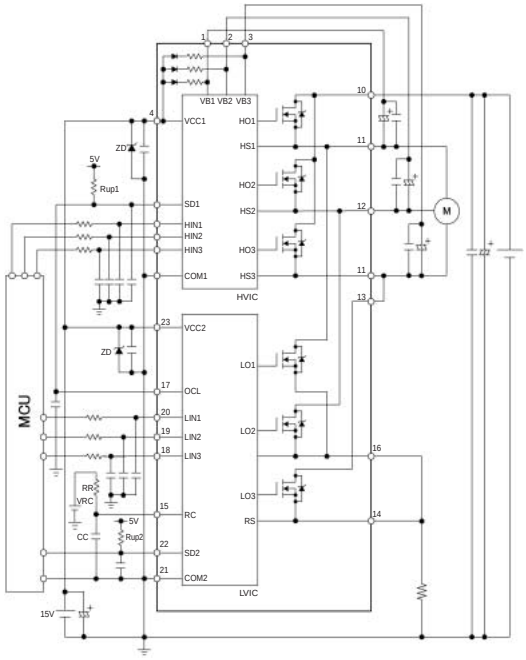

The input pulldown resistor is built into an IC (about 100 kΩ). If the input is expected to be unstable or fluctuate widely, however, it needs to be reinforced with an external resistor.

Attach capacitors near IC. Attach a ceramic capacitor in parallel with the electrolytic capacitor if too much noise is generated.

■External Dimensions (ZIP24 [SMA24Pin/SLA24Pin])

(Unit : mm)

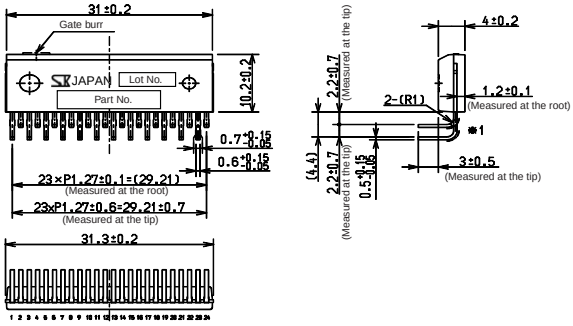

Forming No.2451

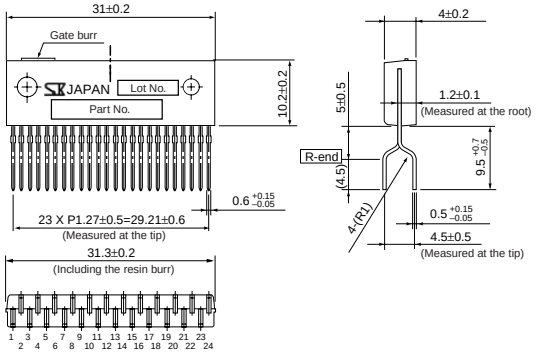

Forming No.2452

Product Mass : Approx.3.9g

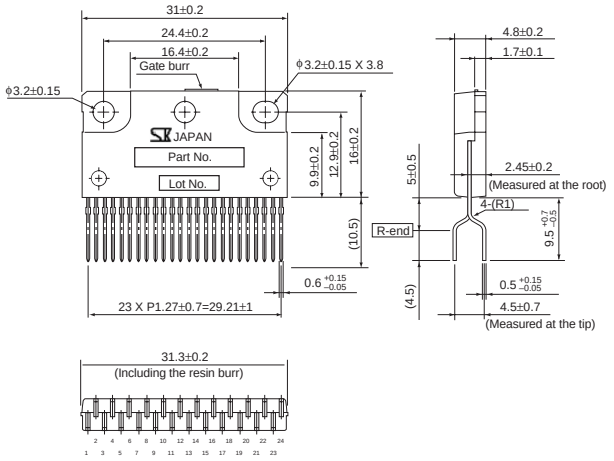

Forming No.2171

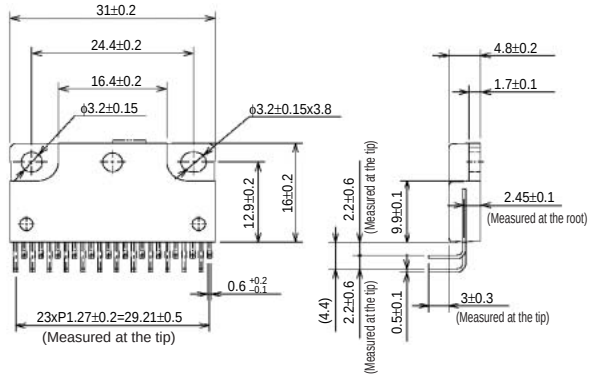

Forming No.2175

Product Mass : Approx.6.2g

SMA6860M Series/SLA6860M Series

■Features

- A package of 6 MOSFET units for 3-phase bridge, pre-drive (HVIC, LVIC), and 3 limiting resistor boot diodes
- High side drive employed using bootstrap method
- Built-in undervoltage lock out circuit (UVLO)
- Built-in overcurrent protection circuit (OCP)
- Built-in Thermal Shut Down (TSD)
- Built-in current limiter circuit (used when there is an external short)
- Built-in error signal output function (H-side: UVLO, L-side: UVLO, TSD, OCP)
- SIP 24-pin package (SLA has an AL heatsink.)

■Absolute Maximum Ratings

(T_a=25°C)

Parameter	Symbol	Ratings				Unit	Conditions
		SMA6861M	SMA6862M	SMA6863M	SLA6868M		
MOSFET Output Breakdown Voltage	V_{DSS}	250	500			V	V_{CC}=15V, V_{IN}=0V
Control Supply Voltage (VCC)	V_{CC}	20				V	Between V_{CC} and COM
Control Supply Voltage (boot)	V_{BS}	20				V	Between V_B and HS (U, V, W)
Output Current (continuous)	I_o	2.0	1.5	2.5		A	
Output Current (pulse)	I_{op}	4	3	5		A	PW≤100μs, duty=1%
Input Voltage	V_{IN}	–0.5 to +7				V	
Power Dissipation	P_D	28			32.8	W	T_C=25°C
Thermal Resistance (Junction to Case)	θ_{j-c}	4.46			3.8	°C/W	When all the elements are operating
Thermal Resistance (Junction to Ambient Air)	θ_{j-a}	31.25			27.7	°C/W	When all the elements are operating
Operating Case Temperature	T_{op}	–20 to +100				°C	
Junction Temperature (Power part)	T_{ch}	+150				°C	
Storage Temperature	T_{stg}	–40 to +150				°C	

■Recommended Operating Conditions

Parameter	Symbol	Ratings									Unit	Conditions
		SMA6861M			SMA6862M			SMA6863M/SLA6868M				
		min.	typ.	max.	min.	typ.	max.	min.	typ.	max.		
Main Supply Voltage	V_{BB}	–	140	200	–	280	400	–	280	400	V	Between V_{BB} and LS
Control Supply Voltage	V_{CC}	13.5	–	16.5	13.5	–	16.5	13.5	–	16.5	V	Between V_{CC} and COM
Input Signal Dead Time	tdead	1.5	–	–	1.5	–	–	1.5	–	–	μs	
Minimum Input Pulse Width	tw	0.5	–	–	0.5	–	–	0.5	–	–	μs	
Junction Temperature	T_j	–	–	125	–	–	125	–	–	125	°C	

■Electrical Characteristics

(T_a=25°C)

Parameter	Symbol	Ratings									Unit	Conditions
		SMA6861M			SMA6862M			SMA6863M/SLA6868M				
		min.	typ.	max.	min.	typ.	max.	min.	typ.	max.		
Control Supply Current1*1	Icc	–	4.2	7	–	4.2	7	–	4.2	7	mA	V_{CC}=15V
Boot Supply Current2*2	Ibs	–	135	380	–	135	380	–	135	380	μA	Vb=15V
Input Voltage	V_{IH}	2.4	2.9	3.4	2.4	2.9	3.4	2.4	2.9	3.4	V	V_{CC}=15V, Output:ON
	V_{IL}	1.6	2.1	2.6	1.6	2.1	2.6	1.6	2.1	2.6		V_{CC}=15V, Output:OFF
Undervoltage Lock Out (high side)	V_{UVHL}	9.0	10.0	11.0	9.0	10.0	11.0	9.0	10.0	11.0	V	Between V_B and U (V, W)
	V_{UVHH}	9.5	10.5	11.5	9.5	10.5	11.5	9.5	10.5	11.5		
Undervoltage Lock Out (low side)	V_{UVLL}	10.0	11.0	12.0	10.0	11.0	12.0	10.0	11.0	12.0	V	Between Vcc and COM
	V_{UVLH}	10.5	11.5	12.5	10.5	11.5	12.5	10.5	11.5	12.5		
Thermal Protection Threshold	T_{DH}	120	135	150	120	135	150	120	135	150	°C	V_{CC}=15V
Thermal Protection Cancellation Threshold	T_{DL}	100	115	130	100	115	130	100	115	130		
Overcurrent Protection Threshold	V_{TRIP}	0.9	1	1.1	0.9	1	1.1	0.9	1	1.1	V	V_{CC}=15V
Overcurrent Protection Retention Time*3	tp	–	4	–	–	4	–	–	4	–	ms	VRC=5V, R_R=330kΩ, R_C=0.01uF
Current Limiter Threshold	V_{LIM}	0.5035	0.53	0.55565	0.5035	0.53	0.55565	0.5035	0.53	0.55565	V	V_{CC}=15V
Boot Diode Forward Voltage	V_{FBD}	–	1.0	1.3	–	1.0	1.3	–	1.0	1.3	V	IF=0.15A
Boot Diode Series Resistance	R_{BD}	–	210	–	–	210	–	–	210	–	Ω	
MOS FET Output Breakdown Voltage	V_{DSS}	250	–	–	500	–	–	500	–	–	V	V_{CC}=15V, I_D=100μA, V_{IN}=0V
MOS FET Output Leakage Current	I_{DSS}	–	–	100	–	–	100	–	–	100	μA	V_{CC}=15V, V_{DS}=500V (250V for SMA6861M), V_{IN}=0V
MOS FET DC ON Resistance	$R_{DS(ON)}$	–	1.4	1.8	–	3.6	4.0	–	2.0	2.4	Ω	V_{CC}=15V, I_D=1A (1.5A for SMA6863M/SLA6868M), V_{IN}=5V
Diode Forward Voltage	V_{SD}	–	1.0	1.5	–	1.0	1.5	–	1.0	1.5	V	V_{CC}=15V, I_D=1A (1.5A for SMA6863M/SLA6868M), V_{IN}=0V
Diode Reverse Recovery Time	trr	–	50	–		75			75		ns	di/dt=100A/μs
Switching Time, High Side	td(on)	–	660	–	–	720	–	–	790	–	ns	V_{BB}=300V (150V for SMA6861M), V_{CC}=15V, I_D=2.0A (1.5A for SMA6862M, 2.5A for SMA6863M), V_{IN}=0 to 5V
	tr	–	25	–	–	40	–	–	60	–		
	trr		690			110			115			
	td(off)	–	630	–	–	670	–	–	725	–		
	tf	–	10	–	–	20	–	–	20	–		
Switching Time, Low Side	td(on)	–	580	–	–	600	–	–	680	–	ns	
	tr	–	50	–	–	40	–	–	70	–		
	trr		95			120			120			
	td(off)	–	540	–	–	555	–	–	605	–		
	tf	–	15	–	–	20	–	–	20	–		

■Internal Block Diagram

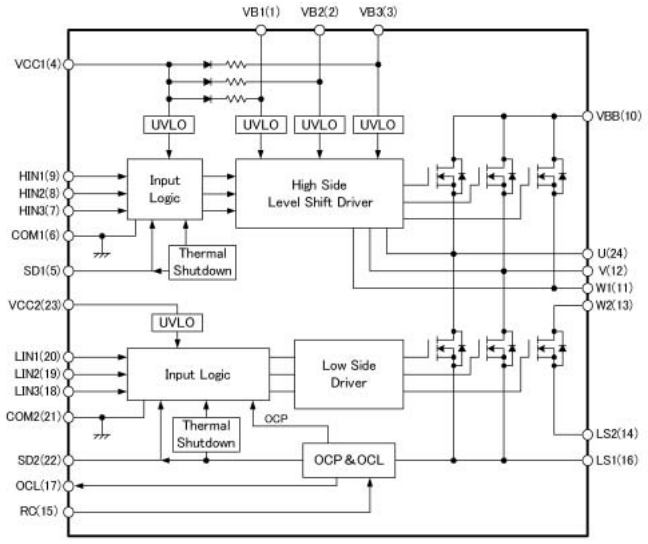

■Typical Connection Diagram

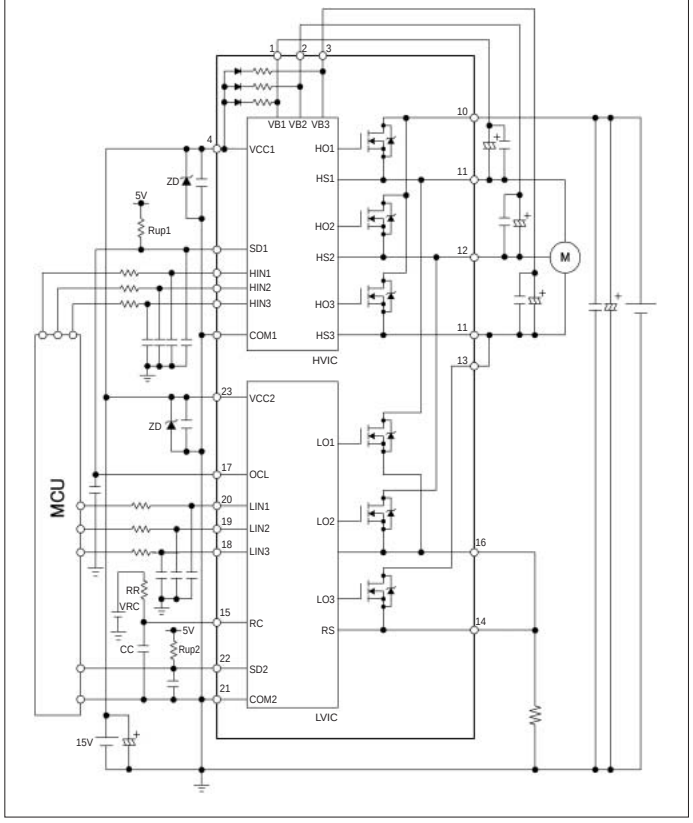

■External Dimensions (ZIP24 [SMA24Pin/SLA24Pin])

(Unit : mm)

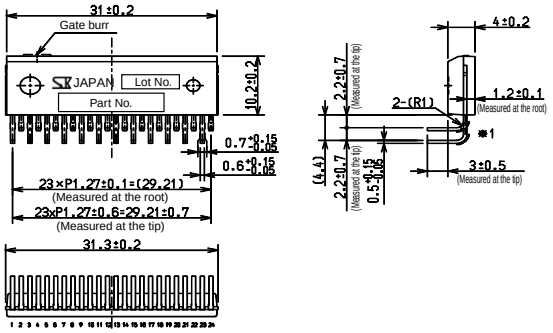

Forming No.2451

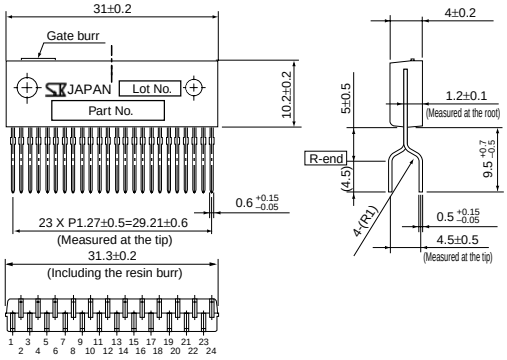

Forming No.2452

Product Mass: Approx. 3.9 g

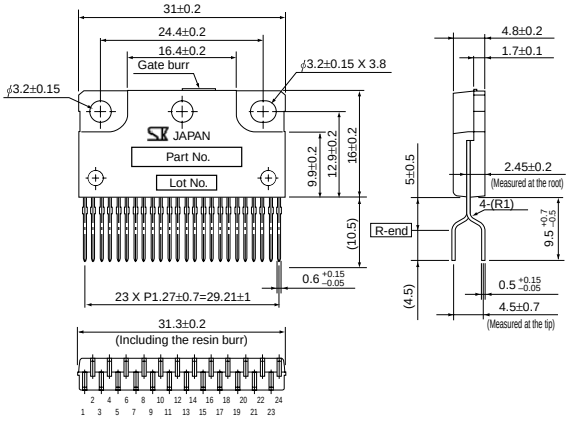

Forming No.2171

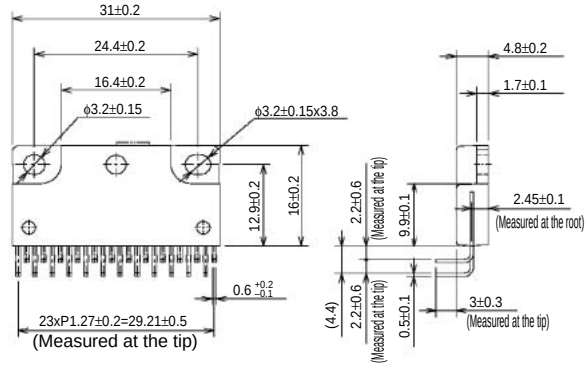

Forming No.2175

Product Mass: Approx. 6.2 g

SLA6805MP Output Element: IGBT

■Features

- A package including 6 units each of IGBT and FRD for 3-phase bridge, and pre-drive (HVIC, LVIC)
- Best for driving a refrigerator compressors and dishwashing driers
- High side drive of bootstrap method has been employed.
- Built-in undervoltage lock out (auto regression)
- Built-in overcurrent protection circuit
- Built-in fail signal output function (for when the overcurrent protection circuit activates)

■Absolute Maximum Ratings

(T_a=25°C)

Parameter	Symbol	Ratings	Unit	Conditions
IGBT Output Voltage	V_{CES}	600	V	Vcc=15V, V_{IN}=0V
Control Supply Voltage	Vcc	20	V	Between V_{CC} and COM
Control Supply Voltage (bootstrap)	V_{BS}	20	V	Between V_B and HS (U, V, W)
Output Current (continuous)	Io	3	A	
Output Current (pulse)	Iop	6	A	PW≤100μs, duty=1%
Input Voltage	V_{IN}	–0.5 to +7	V	
Power Dissipation	P_D	32.8	W	Tc=25°C
Thermal Resistance (Junction to Case)	θ_{j-c}	3.8	°C/W	When all IGBT elements operating
		5.4	°C/W	When all FRD elements operating
Operating Case Temperature	Top	–20 to +100	°C	
Junction Temperature (Power part)	Tch	+150	°C	
Storage Temperature	Tstg	–40 to +150	°C	

■Recommended Operating Conditions

Parameter	Symbol	Ratings			Unit	Conditions
		min.	typ.	max.		
Main Supply Voltage	V_{BB}	–	300	450	V	Between V_{BB} and LS
Control Supply Voltage	Vcc	13.5	–	16.5	V	Between V_{CC} and COM
Input Signal Dead Time	tdead	1.5	–	–	μs	
Minimum Input Pulse Width	tw	0.5	–	–	μs	
Junction Temperature	Tj	–	–	125	°C	

■Electrical Characteristics

Parameter	Symbol	Ratings			Unit	Conditions
		min.	typ.	max.		
Control Supply Voltage	Vcc	13.5	15	16.5	V	Between V_{CC} and COM
Control Supply Current	Icc	–	4	6	mA	Vcc=15V
Input Voltage	V_{IH}	–	2	2.5	V	Vcc=15V, Output:ON
	V_{IL}	1	1.5	–		Vcc=15V, Output:OFF
Input Voltage Hysteresis Width	V_{Ihys}	–	0.5	–	V	Vcc=15V
Input Current	I_{IH}	–	50	100	μA	Vcc=15V, V_{IN}=5V
	I_{IL}	–	–	2		Vcc=15V, V_{IN}=0V
Undervoltage Lock Out (High Side)	V_{UVHL}	9.0	10.0	11.0	V	Between V_B and U (V, W)
	V_{UVHH}	9.5	10.5	11.5		
	V_{UVhys}	–	0.5	–		
Undervoltage Lock Out (Low Side)	V_{UVLL}	10.0	11.0	12.0	V	Between V_{CC} and COM
	V_{UVLH}	10.5	11.5	12.5		
	V_{UVhys}	–	0.5	–		
FO Pin Output Voltage	V_{FOL}	0	–	1.0	V	Vcc=15V
	V_{FOH}	4.0	–	5.5		
Overcurrent Protection Trip Voltage	V_{TRIP}	0.45	0.5	0.55	V	Vcc=15V
Blanking Time	tbk	–	2	–	us	Vcc=15V
IGBT Output Withstand Voltage	V_{CES}	600	–	–	V	Vcc=15V, Ic=100μA, V_{IN}=0V
IGBT Output Leakage Current	I_{CES}	–	–	100	μA	Vcc=15V, V_{CES}=600V, V_{IN}=0V
IGBT Output Saturation Voltage	$V_{CE(sat)}$	–	1.75	2.1	V	Vcc=15V, V_{IN}=5V, I_C=3A
Diode Forward Voltage	V_{EC}	–	1.65	2	V	Vcc=15V, V_{IN}=0V, I_C=3A
Diode Reverse Recovery Time	trr	–	50	–	ns	I_F=3A, di/dt=100A/μs
Switching Time, High Side	td(on)	–	315	–	ns	V_{BB}=300V, Vcc=15V, Ic=3A, V_{IN}=0 to 5V, induvtive load
	tr	–	55	–		
	td(off)	–	455	–		
	tf	–	175	–		
Switching Time, Low Side	td(on)	–	430	–	ns	
	tr	–	100	–		
	td(off)	–	410	–		
	tf	–	190	–		

■Typical Connection Diagram

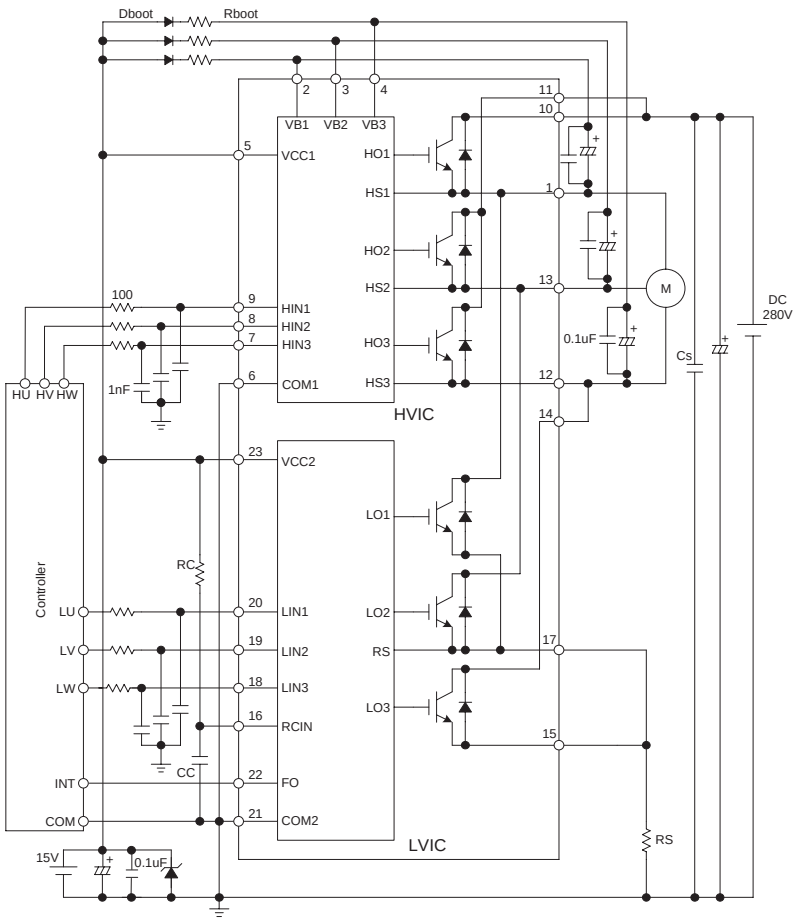

The input pulldown resistor is built in IC (about 100 kΩ). However, if the input is expected to be unstable or very fluctuant, it needs to be reinforced with external resistor.

Attach capacitors near IC. Attach a ceramic capacitor in parallel with the electrolytic capacitor if too much noise is generated.

■External Dimensions (ZIP23 with Fin [SLA23Pin])

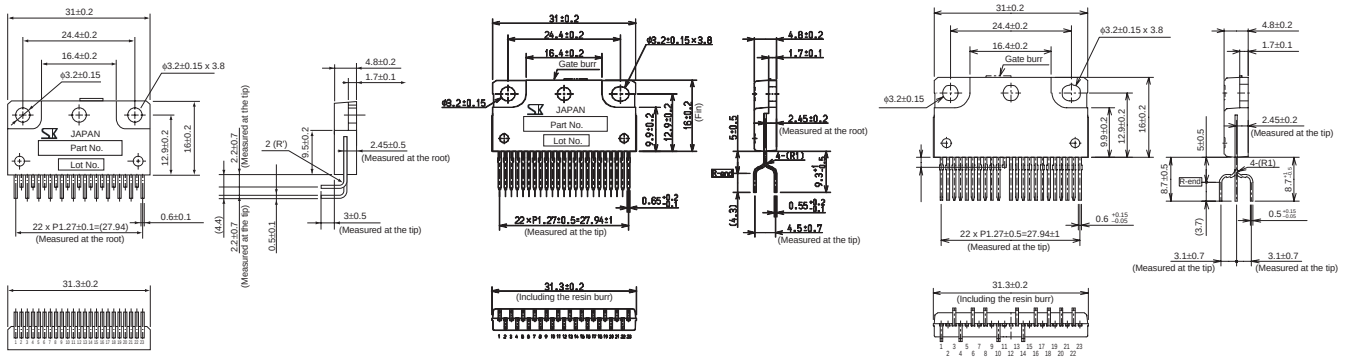

Forming No. 2153

Forming No. 2151

Forming No. 2152

Product Mass: Approx. 6.2g

SLA6845M Support for 3 shunts, Output Element: IGBT

■Features

- A package including 6 units each of IGBT and FRD for 3-phase bridge, and pre-drive (HVIC, LVIC)
- Best for driving a washing machine drying fan motor
- High side drive of bootstrap method has been employed.
- Built-in undervoltage lock out circuit (auto regression)
- Built-in thermal sensor (non-stop)
- Built-in fail signal output function (when operating the thermal sensor and undervoltage lock out circuit)
- Support for 3-shunt current sense
- Built-in 7.5 V regulator output (35mA max.)

■Absolute Maximum Ratings

(T_a=25°C)

Parameter	Symbol	Ratings	Unit	Conditions
IGBT Output Breakdown Voltage	V_{CES}	600	V	
Main Supply Voltage	V_{BB}	450	V	Between V_{BB} and GND
Control Supply Voltage	Vcc	20	V	Between V_{CC} and COM
Control Supply Voltage (Bootstrap)	V_{BS}	20	V	Between VB and HS (U, V, W)
Output Current (continuous)	Io	3	A	Tc=25°C
Output Current (pulse)	Iop	6	A	PW<100μs
Regulator Output Current	I_{REG}	35	mA	
Input Voltage	V_{IN}	–0.5 to +7	V	
Power Dissipation	P_D	32.8	W	Tc=25°C, all IGBT elements in operation
Thermal Resistance (IGBT Junction to Case)	Rj-c(I)	3.8	°C/W	All IGBT elements in operation
Thermal Resistance (FRD Junction to Case)	Rj-c(F)	4.2	°C/W	All FRD elements in operation
Thermal Resistance (Junction to Ambient Air)	Rj-a	25	°C/W	All IGBT and FRD elements in operation
Operating Case Temperature	TOP	–20 to +100	°C	
Junction Temperature	Tj	150	°C	
Storage Temperature	Tstg	–40 to +150	°C	

■Recommended Operating Conditions

Parameter	Symbol	Ratings			Unit	Conditions
		min.	typ.	max.		
Main Supply Voltage	V_{BB}	–	300	450	V	Between V_{BB} and LS
Control Supply Voltage	Vcc	13.5	–	16.5	V	Between V_{CC} and COM
Current Sense Resistance	R_S	0.3			Ω	Between LS1 to 3 and COM2
Input Signal Dead Time	tdead	1.5	–	–	μs	Between LS1 to 3 and COM
Overcurrent Protection Time	tocp			2.0	μs	
Snubber Capacitor	Cs	0.01	–	0.1	μF	Between V_{CC} and COM
Junction Temperature	Tj	–	–	125	°C	

■Electrical Characteristics

Parameter	Symbol	Ratings			Unit	Conditions
		min.	typ.	max.		
Control Supply Voltage	Vcc	13.5	15	16.5	V	Between V_{CC} and COM
Control Supply Current	Icc	–	4	6	mA	Vcc=15V, V_{IN}=5V
Input Voltage	V_{IH}	–	2	2.5	V	Vcc=15V, Output:ON
	V_{IL}	1	1.5	–		Vcc=15V, Output:OFF
Input Voltage Hysteresis Width	V_{Ihys}	–	0.5	–	V	Vcc=15V
Input Current	I_{IH}	–	50	100	μA	Vcc=15V, V_{IN}=5V
	I_{IL}	–	–	2		Vcc=15V, V_{IN}=0V
Undervoltage Lock Out (high side)	V_{UVHL}	9.0	10.0	11.0	V	Between V_B and U (V, W)
	V_{UVHH}	9.5	10.5	11.5		
	V_{UVhys}	–	0.5	–		Hystersis
Undervoltage Lock Out (low side)	V_{UVLL}	10.0	11.0	12.0	V	Between V_{CC} and COM
	V_{UVLH}	10.5	11.5	12.5		
	V_{UVhys}	–	0.5	–		Hystersis
FO Terminal Output Voltage	V_{FOL}	0	–	1.0	V	Vcc=15V, I_{FO}=–1mA
	V_{FOH}	4.0	–	5.5		Vcc=15V, I_{FO}=1.6mA
Thermal Sense and Release Threshold	T_{DH}	135	150	165	°C	Vcc=15V, No Fin, I_{REG}=0mA
	T_{DL}	105	120	135		
	T_{Dhys}	–	30	–		
Regulator Output Voltage	V_{REG}	6.75	7.5	8.25	V	I_{REG}=35mA
IGBT Output Breakdown Voltage	V_{CES}	600	–	–	V	Vcc=15V, Ic=1mA, V_{IN}=0V
IGBT Output Leakage Current	I_{CES}	–	–	1	mA	Vcc=15V, V_{CE}=600V, V_{IN}=0V
IGBT Output Saturation Voltage	V_{CE}(sat)	–	1.75	2.1	V	Vcc=15V, Ic=3A, V_{IN}=5V
Diode Forward Voltage	V_F	–	1.65	2.0	V	Vcc=15V, I_F=3A, V_{IN}=0V
Diode Reverse Recovery Time	trr		50		ns	I_F=3A, di/dt=100A/μs
High Side Switching Time	td(on)	–	315	–	ns	V_{BB}=300V, Vcc=15V, Ic=3A, V_{IN}=0 to 5V, Inductive load
	tr	–	50	–		
	td(off)	–	375	–		
	tf	–	165	–		
Low Side Switching Time	td(on)	–	325	–	ns	
	tr	–	60	–		
	td(off)	—	400	–		
	tf	—	165	–		

■Internal Block Diagram

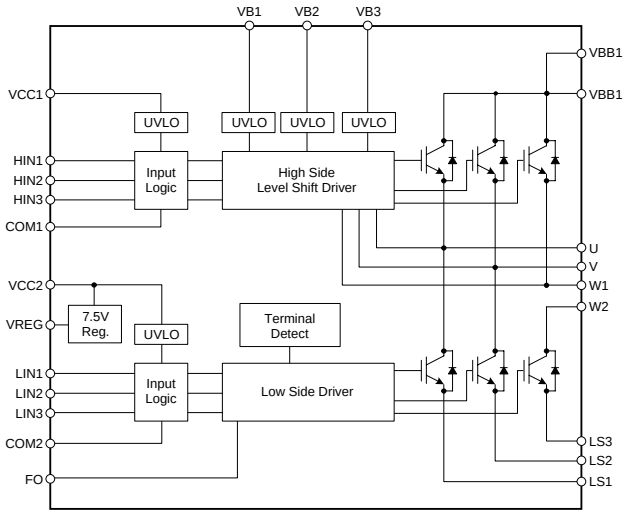

■Typical Connection Diagram

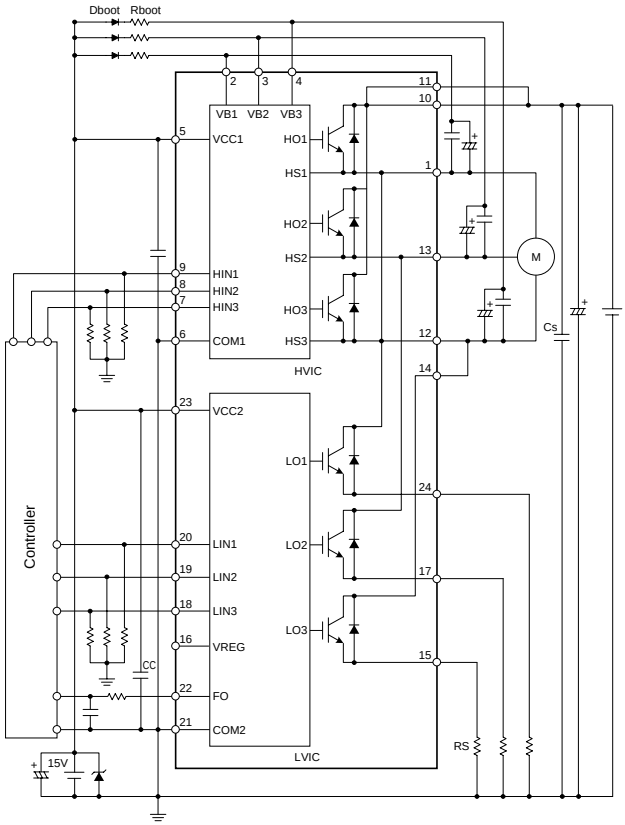

The input pulldown resistor is built into the IC (about 100 kΩ). However, if the input is expected to be unstable or to fluctuate greatly, it needs to be reinforced using an external resistor.

Attach capacitors near the IC. Attach a ceramic capacitor in parallel with the electrolytic capacitor if too much noise is generated.

■External Dimensions (ZIP24 with Fin [SLA24Pin])

(Unit : mm)

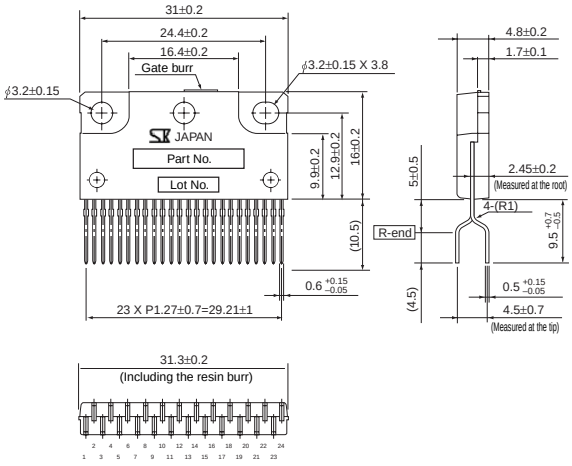

Forming No. 2171

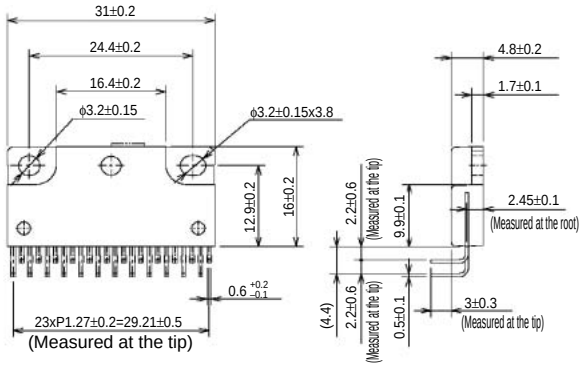

Forming No. 2175

Product Mass: Approx. 6.2 g

SCM1100M Series Support for 3-shunt, Output Element : IGBT

■Features

- Each half-bridge circuit consists of a pre-driver circuit that is completely independent from the others
- Protection against simultaneous high- and low-side turning on
- Bootstrap diodes with series resistors for suppressing inrush current are incorporated
- CMOS compatible input (3.3 to 5 V)
- Designed to minimize simultaneous current through both high- and low-side IGBTs by optimizing gate drive resistors
- UVLO protection with auto restart
- Overcurrent protection with off-time period adjustable by an external capacitor
- Fault (FO indicator) signal output at protection activation: UVLO (low side only), OCP, and STP
- Proprietary power DIP package
- UL Recognized Component (File No.: E118037)

■Absolute Maximum Ratings

Parameter	Symbol	Ratings						Unit	Conditions
		SCM1101M (SCM1101MF)	SCM1103M	SCM1104M (SCM1104MF)	SCM1105MF	SCM1106M (SCM1106MF)	SCM1110MF		
Supply Voltage	V_{BB}	450	450	450	450	450	450	V	Between V_{BB} and LS1 to LS3
Supply Voltage (Surge)	$V_{DC(Surge)}$	500	500	500	500	500	500	V	Between V_{BB} and LS1 to LS3
IGBT Output Withstand Voltage	V_{CES}	600	600	600	600	600	600	V	V_{CC}=15V,I_C=1mA,V_{IN}=0V
Control Supply Voltage	V_{CC}	20	20	20	20	20	20	V	V_{CC}1 to 3 and COM1 to COM3
Control Supply Voltage (Bootstrap)	V_{BS}	20	20	20	20	20	20	V	V_{B1} to V_{B3} and HS (U,V,W)
Output Current (continuous)	Io	10	5	8	15	10	15	Adc	
Output Current (pulse)	Iop	20	10	16	30	20	30	Adc	T≤1ms
Input Voltage	V_{IN}	–0.5 to +7	–0.5 to +7	–0.5 to +7	–0.5 to +7	–0.5 to +7	–0.5 to +7	V	H_{IN1} to H_{IN3} or L_{IN1} to L_{IN3} and COM1 to COM3
FO Pin Voltage	V_{FO}	7	7	7	7	7	7	V	F_{O1} to F_{O3} and COM1 to COM3
Power Dissipation	P_D	20.8(33.8)	19	20.2(32.9)	41.7	20.8(33.8)	41.7	W	T_C=25°C while one IGBT element operates
Thermal Resistance (IGBT)	$R_{(j-c)Q}$	6(3.7)	6.3	6.2(3.8)	3	6(3.7)	3	°C/W	Per IGBT element
Thermal Resistance (FRD)	$R_{(j-c)F}$	6.5(4.2)	6.5	6.5(4.2)	4	6.5(4.2)	4	°C/W	Per FRD element
Operating Case Temperature	T_{OP}	–20 to +100	–20 to +100	–20 to +100	–20 to +100	–20 to +100	–20 to +100	°C	
Junction Temperature	Tj	150	150	150	150	150	150	°C	
Storage Temperature	Tstg	–40 to +150	–40 to +150	–40 to +150	–40 to +150	–40 to +150	–40 to +150	°C	
Insulation Withstand Voltage	Viso	2000	2000	2000	2000	2000	2000	V	Between rear and lead pins, AC one minute

■Recommended Operating Conditions

Parameter	Symbol	Ratings			Unit	Conditions
		SCM1100M Series				
		min.	typ.	max.		
Main Supply Voltage	V_{DC}	–	300	400	V	Between V_{BB} and LS
Control Supply Voltage	V_{CC},V_{BS}	13.5	–	16.5	V	
Minimum Input Pulse Width	$t_{INmin(on)}$	0.5	–	–	μs	ON pulse
	$t_{INmin(off)}$	0.5	–	–	μs	OFF pulse
Input Signal Dead Time	t_{dead}	1.5	–	–	μs	
FO Pull-up Resistor	R_{FO}	1	–	22	kΩ	
CFO Capacitor Capacity	C_{FO}	1	–	10	nF	
FO Pull-up Voltage	V_{FO}	4.5	–	5.5	V	
Boot Capacitor	C_{BOOT}	10	–	220	uF	
Shunt Resistor*1	R_S	25.5	–	–	mΩ	For Ip≤rated output current (pulse)
PWM Carrier Frequency	fc	–	–	20*2	kHz	
Junction Temperature	Tj	–	–	125	°C	

*1: The shunt resistance varies depending on the rated current.
*2: 10 for SCM1101M(F)/SCM1015MF

■Electrical Characteristics

Parameter	Symbol	Ratings									Unit	Conditions
		SCM1101M/SCM1101MF			SCM1103M			SCM1104M/SCM1104MF				
		min.	typ.	max.	min.	typ.	max.	min.	typ.	max.		
Control Supply Voltage	V_{CC}	13.5	–	16.5	13.5	–	16.5	13.5	–	16.5	V	Between V_{CC} and COM
Control Supply Current	I_{CC}	–	5	8	–	5	8	–	5	8	mA	V_{CC}=15V, 3 circuits total
Bootstrap Supply Current	I_{bs}	–	400	800	–	400	800	–	400	800	uA	V_B-HS=15V, 1 circuit
Input Voltage	V_{IH}	–	2	2.5	–	2	2.5	–	2	2.5	V	V_{CC}=15V, Output:ON
	V_{IL}	1	1.5	–	1	1.5	–	1	1.5	–		V_{CC}=15V, Output:OFF
Input Voltage Hysteresis Width	V_H	–	0.5	–	–	0.5	–	–	0.5	–		V_{CC}=15V
Input Current	I_{IH}	–	50	100	–	50	100	–	50	100	μA	V_{CC}=15V, V_{IN}=5V
	I_{IL}	–	–	2	–	–	2	–	–	2		V_{CC}=15V, V_{IN}=0V
Undervoltage Lock Out (high side)	V_{UVHL}	10	–	12	10	–	12	10	–	12	V	V_{CC}=15V
	V_{UVHH}	10.5	–	12.5	10.5	–	12.5	10.5	–	12.5		
Undervoltage Lock Out (low side)	V_{UVLL}	10.5	–	12.5	10.5	–	12.5	10.5	–	12.5		
	V_{UVLH}	11	–	13	11	–	13	11	–	13		
FO Pin Output Voltage	V_{FOL}	–	–	0.5	–	–	0.5	–	–	0.5	V	V_{CC}=15V,V_{FO}=5V
	V_{FOH}	4.8	–	–	4.8	–	–	4.8	–	–		R_{FO}=10kΩ
Overcurrent Protection Trip Voltage	V_{TRIP}	0.46	0.5	0.54	0.46	0.5	0.54	0.46	0.5	0.54	V	V_{CC}=15V
Overcurrent Protection Hold Time	t_P	2	–	–	2	–	–	2	–	–	ms	V_{CC}=15V, C_{FO}=2.2nF
Blanking Time	tbk	–	2	–	–	2	–	–	2	–	μs	V_{CC}=15V
IGBT Output Withstand Voltage	V_{CES}	600	–	–	600	–	–	600	–	–	V	V_{CC}=15V, I_C=1mA, V_{IN}=0V
IGBT Output Leakage Current	I_{CES}	–	–	1	–	–	1	–	–	1	mA	V_{CC}=15V, V_{CE}=600V, V_{IN}=0V
IGBT Output Saturation Voltage	$V_{CE(sat)}$	–	1.75	2.2	–	1.7	2.1	–	1.75	2.2	V	V_{CC}=15V, I_C=rated output current (continuous) V_{IN}=5V
Boot Diode Forward Voltage	V_F	–	1.7	2.2	–	1.4	2	–	1.6	2.2	V	V_{CC}=15V, I_F=rated output current (continuous), V_{IN}=0V
Boot Diode Leakage Current	I_{IB}	–	5	10	–	5	10	–	5	10	μA	V_R=600V
Boot Diode Forward Voltage	V_{FB}	–	1.1	1.3	–	1.1	1.3	–	1.1	1.3	V	I_F=0.15A
Boot Diode Recovery Time	trr	–	70	–	–	70	–	–	70	–	ns	I_F/I_{RP}=100mA/100mA
Boot Diode Series Resistance	R_B	17.6	22	26.4	17.6	22	26.4	17.6	22	26.4	Ω	
High Side Switching Time	td(on)	–	320	–	–	340	–	–	360	–	ns	V_{DC}=300V, V_{CC}=15V I_C=10A(SCM1101M), I_C=5A(SCM1103M), I_C=8A(SCM1104M) HIN=0 to 5V Inductive load
	tr	–	50	–	–	60	–	–	70	–		
	trr	–	80	–	–	80	–	–	80	–		
	td(off)	–	560	–	–	430	–	–	560	–		
	tf	–	210	–	–	240	–	–	210	–		
Low Side Switching Time	td(on)	–	350	–	–	380	–	–	420	–	ns	V_{DC}=300V, V_{CC}=15V I_C=10A(SCM1101M), I_C=5A(SCM1103M), I_C=8A(SCM1104M) HIN=0 to 5V Inductive load
	tr	–	80	–	–	90	–	–	110	–		
	trr	–	140	–	–	100	–	–	140	–		
	td(off)	–	610	–	–	500	–	–	630	–		
	tf	–	200	–	–	220	–	–	210	–		

Parameter	Symbol	Ratings									Unit	Conditions
		SCM1105MF			SCM1106M/SCM1106MF			SCM1110MF				
		min.	typ.	max.	min.	typ.	max.	min.	typ.	max.		
Control Supply Voltage	V_{CC}	13.5	–	16.5	13.5	–	16.5	13.5	–	16.5	V	Between V_{CC} and COM
Control Supply Current	I_{CC}	–	5	8	–	5	8	–	5	8	mA	V_{CC}=15V, 3 circuits total
Bootstrap Supply Current	I_{bs}	–	400	800	–	400	800	–	400	800	uA	V_B-HS=15V, 1 circuit
Input Voltage	V_{IH}	–	2	2.5	–	2	2.5	–	2	2.5	V	V_{CC}=15V, Output:ON
	V_{IL}	1	1.5	–	1	1.5	–	1	1.5	–		V_{CC}=15V, Output:OFF
Input Voltage Hysteresis Width	V_H	–	0.5	–	–	0.5	–	–	0.5	–		V_{CC}=15V
Input Current	I_{IH}	–	50	100	–	50	100	–	50	100	μA	V_{CC}=15V, V_{IN}=5V
	I_{IL}	–	–	2	–	–	2	–	–	2		V_{CC}=15V, V_{IN}=0V
Undervoltage Lock Out (high side)	V_{UVHL}	10	–	12	10	–	12	10	–	12	V	V_{CC}=15V
	V_{UVHH}	10.5	–	12.5	10.5	–	12.5	10.5	–	12.5		
Undervoltage Lock Out (low side)	V_{UVLL}	10.5	–	12.5	10.5	–	12.5	10.5	–	12.5		
	V_{UVLH}	11	–	13	11	–	13	11	–	13		
FO Pin Output Voltage	V_{FOL}	–	–	0.5	–	–	0.5	–	–	0.5	V	V_{CC}=15V, V_{FO}=5V
	V_{FOH}	4.8	–	–	4.8	–	–	4.8	–	–		R_{FO}=10kΩ
Overcurrent Protection Trip Voltage	V_{TRIP}	0.46	0.5	0.54	0.46	0.5	0.54	0.46	0.5	0.54	V	V_{CC}=15V
Overcurrent Protection Hold Time	t_P	2	–	–	2	–	–	2	–	–	ms	V_{CC}=15V,C_{FO}=2.2nF
Blanking Time	tbk	–	2	–	–	2	–	–	2	–	μs	V_{CC}=15V
IGBT Output Withstand Voltage	V_{CES}	600	–	–	600	–	–	600	–	–	V	V_{CC}=15V, I_C=1mA, V_{IN}=0V
IGBT Output Leakage Current	I_{CES}	–	–	1	–	–	1	–	–	1	mA	V_{CC}=15V, V_{CE}=600V, V_{IN}=0V
IGBT Output Saturation Voltage	$V_{CE(sat)}$	–	1.75	2.2	–	2.2	2.6	–	2.2	2.6	V	V_{CC}=15V, I_C=rated output current (continuous) V_{IN}=5V
Boot Diode Forward Voltage	V_F	–	1.75	2.2	–	1.7	2.2	–	1.75	2.2	V	V_{CC}=15V, I_F=rated output current (continuous), V_{IN}=0V
Boot Diode Leakage Current	I_{IB}	–	5	10	–	5	10	–	5	10	μA	V_R=600V
Boot Diode Forward Voltage	V_{FB}	–	1.1	1.3	–	1.1	1.3	–	1.1	1.3	V	I_F=0.15A
Boot Diode Recovery Time	trr	–	70	–	–	70	–	–	70	–	ns	I_F/I_{RP}=100mA/100mA
Boot Diode Series Resistance	R_B	17.6	22	26.4	17.6	22	26.4	17.6	22	26.4	Ω	
High Side Switching Time	td(on)	–	365	–	–	320	–	–	365	–	ns	V_{DC}=300V, V_{CC}=15V I_C=15A(SCM1105M), I_C=10A(SCM1106M), I_C=15A(SCM1110MF) HIN=0 to 5V Inductive load
	tr	–	80	–	–	50	–	–	80	–		
	trr	–	90	–	–	80	–	–	90	–		
	td(off)	–	690	–	–	490	–	–	650	–		
	tf	–	200	–	–	80	–	–	85	–		
Low Side Switching Time	td(on)	–	415	–	–	350	–	–	415	–	ns	V_{DC}=300V, V_{CC}=15V I_C=15A(SCM1105M), I_C=10A(SCM1106M), I_C=15A(SCM1110MF) HIN=0 to 5V Inductive load
	tr	–	135	–	–	80	–	–	135	–		
	trr	–	115	–	–	140	–	–	115	–		
	td(off)	–	790	–	–	540	–	–	755	–		
	tf	–	205	–	–	80	–	–	85	–		

■Internal Block Diagram (Single Circuit)

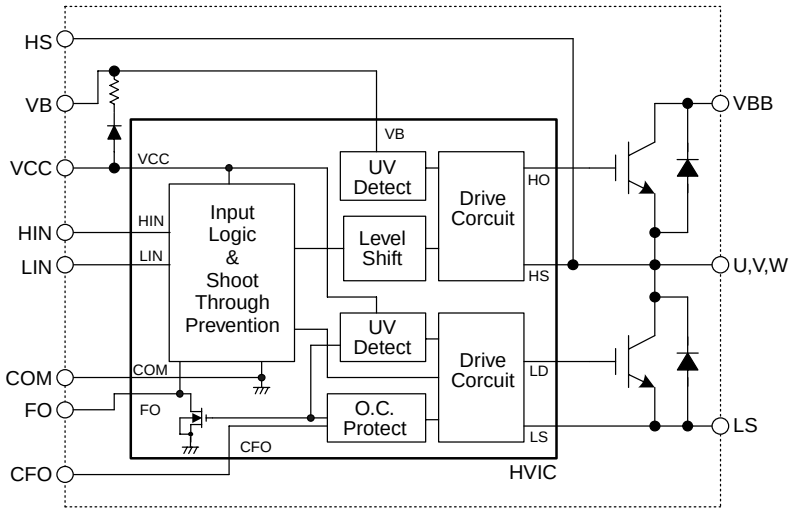

■Typical Connection Diagram

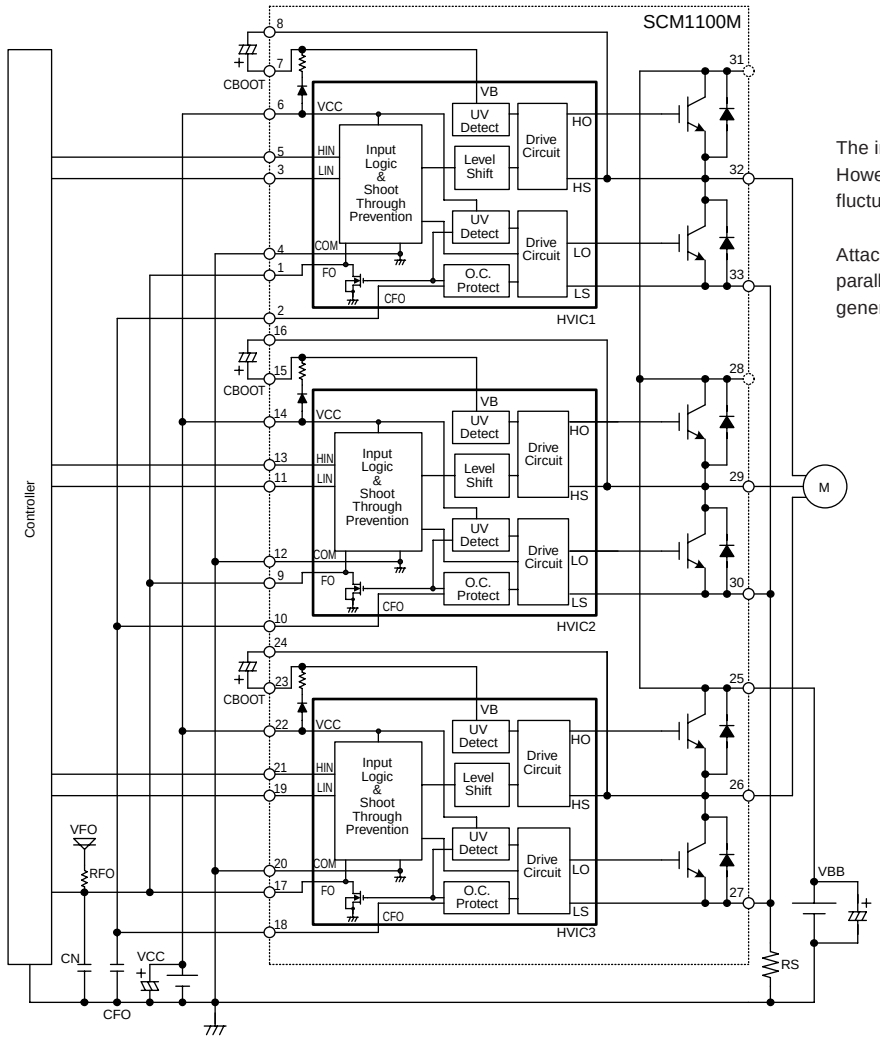

The input pulldown resistor is built in IC (about 100 kΩ). However, if the input is expected to be unstable or very fluctuant, it needs to be reinforced with external resistor.

Attach capacitors near IC. Attach a ceramic capacitor in parallel with the electrolytic capacitor if too much noise is generated.

■External Dimensions (SCM)

(Unit : mm)

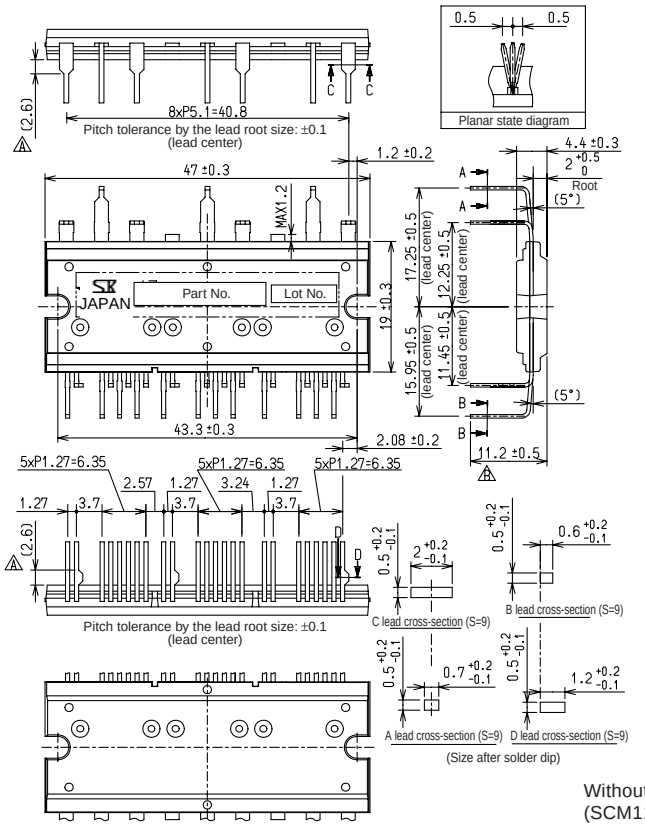

Without Fin
(SCM1100M)

Forming No. 2551
Product Mass: Approx. 12.6g

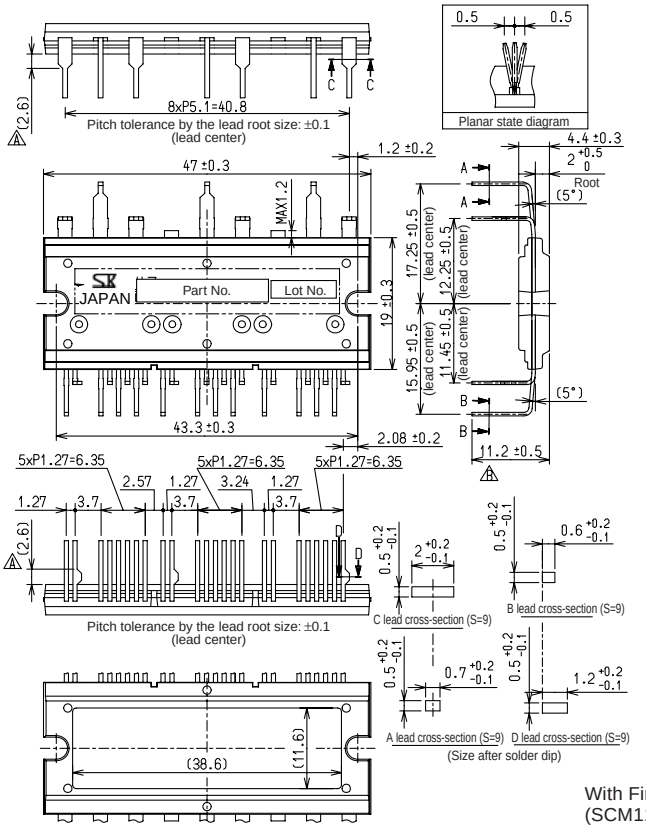

With Fin
(SCM1100MF)

Forming No. 2552
Product Mass: Approx. 13.5g

2

Transistors

Ordering Information

All products listed must be ordered in standard packing increments.

Series Name/ Product Name	Package	Standard Packing Quantities	
		Bulk	Taping
2SA1186	TO3P	500(Box)/1080(Stick)	–
2SA1215	MT200	250(Box)	–
2SA1216	MT200	250(Box)	–
2SA1294	TO3P	500(Box)/1080(Stick)	–
2SA1295	MT200	250(Box)	–
2SA1303	TO3P	500(Box)/1080(Stick)	–
2SA1386	TO3P	500(Box)/1080(Stick)	–
2SA1386A	TO3P	500(Box)/1080(Stick)	–
2SA1488	TO220F	1000(Box)/3750(Stick)	–
2SA1488A	TO220F	1000(Box)/3750(Stick)	–
2SA1492	TO3P	500(Box)/1080(Stick)	–
2SA1493	MT200	250(Box)	–
2SA1494	MT200	250(Box)	–
2SA1567	TO220F	1000(Box)/3750(Stick)	–
2SA1568	TO220F	1000(Box)/3750(Stick)	–
2SA1667	TO220F	1000(Box)/3750(Stick)	–
2SA1668	TO220F	1000(Box)/3750(Stick)	–
2SA1673	TO3PF	500(Box)/1080(Stick)	–
2SA1693	TO3P	500(Box)/1080(Stick)	–
2SA1694	TO3P	500(Box)/1080(Stick)	–
2SA1695	TO3P	500(Box)/1080(Stick)	–
2SA1725	TO220F	1000(Box)/3750(Stick)	–
2SA1746	TO3PF	500(Box)/1080(Stick)	–
2SA1859	TO220F	1000(Box)/3750(Stick)	–
2SA1859A	TO220F	1000(Box)/3750(Stick)	–
2SA1860	TO3PF	500(Box)/1080(Stick)	
2SA1907	TO3PF	500(Box)/1080(Stick)	–
2SA1908	TO3PF	500(Box)/1080(Stick)	–
2SA1909	TO3PF	500(Box)/1080(Stick)	–
2SA2151	TO3P	500(Box)/1080(Stick)	–
2SA2151A	TO3P	500(Box)/1080(Stick)	–
2SA2223	TO3P	500(Box)/1080(Stick)	–
2SB1257	TO220F	1000(Box)/3750(Stick)	–
2SB1258	TO220F	1000(Box)/3750(Stick)	–
2SB1259	TO220F	1000(Box)/3750(Stick)	–
2SB1351	TO220F	1000(Box)/3750(Stick)	–
2SB1382	TO3PF	500(Box)/1080(Stick)	–
2SB1383	TO3P	500(Box)/1080(Stick)	–
2SB1420	TO3P	500(Box)/1080(Stick)	–
2SB1559	TO3P	500(Box)/1080(Stick)	–
2SB1560	TO3P	500(Box)/1080(Stick)	–
2SB1570	MT200	250(Box)	–
2SB1587	TO3PF	500(Box)/1080(Stick)	–
2SB1588	TO3PF	500(Box)/1080(Stick)	–
2SB1647	TO3P	500(Box)/1080(Stick)	–
2SB1648	MT200	250(Box)	–
2SB1649	TO3PF	500(Box)/1080(Stick)	–
2SB1686	TO220F	1000(Box)/3750(Stick)	–
2SB1687	TO3PF	500(Box)/1080(Stick)	–
2SC2837	TO3P	500(Box)/1080(Stick)	–
2SC2921	MT200	250(Box)	–
2SC2922	MT200	250(Box)	–

Series Name/ Product Name	Package	Standard Packing Quantities	
		Bulk	Taping
2SC3263	TO3P	500(Box)/1080(Stick)	–
2SC3264	MT200	250(Box)	–
2SC3284	TO3P	500(Box)/1080(Stick)	–
2SC3519	TO3P	500(Box)/1080(Stick)	–
2SC3519A	TO3P	500(Box)/1080(Stick)	–
2SC3835	TO3P	500(Box)/1080(Stick)	–
2SC3851	TO220F	1000(Box)/3750(Stick)	–
2SC3851A	TO220F	1000(Box)/3750(Stick)	–
2SC3852	TO220F	1000(Box)/3750(Stick)	–
2SC3852A	TO220F	1000(Box)/3750(Stick)	–
2SC3856	TO3P	500(Box)/1080(Stick)	–
2SC3857	MT200	250(Box)	–
2SC3858	MT200	250(Box)	–
2SC3927	TO3P	500(Box)/1080(Stick)	–
2SC4024	TO220F	1000(Box)/3750(Stick)	–
2SC4064	TO220F	1000(Box)/3750(Stick)	–
2SC4131	TO3PF	500(Box)/1080(Stick)	–
2SC4138	TO3P	500(Box)/1080(Stick)	–
2SC4140	TO3P	500(Box)/1080(Stick)	–
2SC4153	TO220F	1000(Box)/3750(Stick)	–
2SC4300	TO3PF	500(Box)/1080(Stick)	–
2SC4301	TO3PF	500(Box)/1080(Stick)	–
2SC4304	TO220F	1000(Box)/3750(Stick)	–
2SC4381	TO220F	1000(Box)/3750(Stick)	–
2SC4382	TO220F	1000(Box)/3750(Stick)	–
2SC4388	TO3PF	500(Box)/1080(Stick)	–
2SC4445	TO3PF	500(Box)/1080(Stick)	–
2SC4466	TO3P	500(Box)/1080(Stick)	–
2SC4467	TO3P	500(Box)/1080(Stick)	–
2SC4468	TO3P	500(Box)/1080(Stick)	–
2SC4495	TO220F	1000(Box)/3750(Stick)	–
2SC4511	TO220F	1000(Box)/3750(Stick)	–
2SC4518	TO220F	1000(Box)/3750(Stick)	–
2SC4518A	TO220F	1000(Box)/3750(Stick)	–
2SC4546	TO220F	1000(Box)/3750(Stick)	–
2SC4706	TO3P	500(Box)/1080(Stick)	–
2SC4883	TO220F	1000(Box)/3750(Stick)	–
2SC4883A	TO220F	1000(Box)/3750(Stick)	–
2SC4886	TO3PF	500(Box)/1080(Stick)	–
2SC5071	TO3P	500(Box)/1080(Stick)	–
2SC5099	TO3PF	500(Box)/1080(Stick)	–
2SC5100	TO3PF	500(Box)/1080(Stick)	–
2SC5101	TO3PF	500(Box)/1080(Stick)	–
2SC5130	TO220F	1000(Box)/3750(Stick)	–
2SC5287	TO3P	500(Box)/1080(Stick)	–
2SC6011	TO3P	500(Box)/1080(Stick)	–
2SC6011A	TO3P	500(Box)/1080(Stick)	–
2SC6145	TO3P	500(Box)/1080(Stick)	–
2SD1785	TO220F	1000(Box)/3750(Stick)	–
2SD1796	TO220F	1000(Box)/3750(Stick)	–
2SD2014	TO220F	1000(Box)/3750(Stick)	–
2SD2015	TO220F	1000(Box)/3750(Stick)	–

Series Name/ Product Name	Package	Standard Packing Quantities	
		Bulk	Taping
2SD2016	TO220F	1000(Box)/3750(Stick)	–
2SD2017	TO220F	1000(Box)/3750(Stick)	–
2SD2045	TO3PF	500(Box)/1080(Stick)	–
2SD2081	TO220F	1000(Box)/3750(Stick)	–
2SD2082	TO3PF	500(Box)/1080(Stick)	–
2SD2083	TO3P	500(Box)/1080(Stick)	–
2SD2141	TO220F	1000(Box)/3750(Stick)	–
2SD2389	TO3P	500(Box)/1080(Stick)	–
2SD2390	TO3P	500(Box)/1080(Stick)	–
2SD2401	MT200	250(Box)	–
2SD2438	TO220F	1000(Box)/3750(Stick)	–
2SD2439	TO3PF	500(Box)/1080(Stick)	–
2SD2560	TO3P	500(Box)/1080(Stick)	–
2SD2561	MT200	250(Box)	–
2SD2562	TO3PF	500(Box)/1080(Stick)	–
2SD2641	TO3P	500(Box)/1080(Stick)	–
2SD2642	TO220F	1000(Box)/3750(Stick)	–
2SD2643	TO3PF	500(Box)/1080(Stick)	–
2SK2420	TO220F	3750(Stick)	–
2SK2701	TO220F	3750(Stick)	–
2SK2702	TO220F	3750(Stick)	–
2SK2707	TO220F	3750(Stick)	–
2SK2079	TO3PF	1080(Stick)	–
2SK2778	TO220F	3750(Stick)	–
2SK2779	TO220F	3750(Stick)	–
2SK2803	TO220F	3750(Stick)	–
2SK2848	TO220F	3750(Stick)	–
2SK2943	TO220F	3750(Stick)	–
2SK3003	TO220F	3750(Stick)	–
2SK3004	TO220F	3750(Stick)	–
2SK3199	TO220F	3750(Stick)	–
2SK3710	TO220S(Surface-mount)	–	1000
2SK3711	TO3P	1080(Stick)	–
2SK3724	TO220S(Surface-mount)	–	1000
2SK3800	TO220S(Surface-mount)	–	1000
2SK3801	TO3P	1080(Stick)	–
2SK3851	TO3P	1080(Stick)	–
EKV550	TO220	1000(Stick)	–
FGT312	TO220F	3750(Stick)	–
FGT313	TO220F	3750(Stick)	–
FGT412	TO220F	3750(Stick)	–
FGT612	TO220F	3750(Stick)	–
FGM603	TO3PF	1080(Stick)	–
FKP202	TO220F	3750(Stick)	–
FKP250A	TO3PF	1080(Stick)	–
FKP252	TO220F	3750(Stick)	–
FKP253	TO220F	3750(Stick)	–
FKP280A	TO3PF	1080(Stick)	–
FKP300A	TO3PF	1080(Stick)	–
FKP330C	TO3PF	1080(Stick)	–
FKV460S	TO220S(Surface-mount)	–	1000
FKV550N	TO220F	3750(Stick)	–

Series Name/ Product Name	Package	Standard Packing Quantities	
		Bulk	Taping
FKV550T	TO220F	3750(Stick)	–
FKV575	TO220F	3750(Stick)	–
FKV660S	TO220S(Surface-mount)	–	1000
MGD623N	TO3P	1080(Stick)	–
MGD623S	TO3P	1080(Stick)	–
SDA05	PS16Pin	–	1200
SDC03	PS16Pin	–	1200
SDC04	PS16Pin	–	1200
SDC06	PS16Pin	–	1200
SDC07	PS16Pin	–	1200
SDH02	PS16Pin	–	1200
SKP202	TO263(Surface-mount)	–	800
SKP253	TO263(Surface-mount)	–	800
SLA4xxx	SLA12Pin	250(Box)/1080(Stick)	–
SLA4xxx	SLA21Pin	250(Box)/1080(Stick)	–
SLA5xxx	SLA12Pin	250(Box)/1080(Stick)	–
SLA5xxx	SLA15Pin	250(Box)/1080(Stick)	–
SLA6xxx	SLA12Pin	250(Box)/1080(Stick)	–
SMA4xxx	SMA12Pin	1440(Stick)	–
SMA5xxx	SMA12Pin	1440(Stick)	–
SMA5xxx	SMA15Pin	1440(Stick)	–
SMA6xxx	SMA12Pin	1440(Stick)	–
STAxxx	STA8Pin	1000(Box)/4050(Stick)	–
STAxxx	STA10Pin	3200(Box)/3300(Stick)	–
STD01N	TO3P-5	500(Box)/1080(Stick)	–
STD01P	TO3P-5	500(Box)/1080(Stick)	–
STD03N	TO3P-5	500(Box)/1080(Stick)	–
STD03P	TO3P-5	500(Box)/1080(Stick)	–

Application Note

Since reliability can be affected adversely by improper storage environment or handling methods during Characteristic tests, please observe the following cautions.

■ Cautions for Storage

- ●Ensure that storage conditions comply with the normal temperature (5 to 35°C) and the normal relative humidity (around 40 to 75%), and avoid storage locations that experience high temperature and humidity, or extreme changes in temperature or humidity.
- ●Avoid locations where dust or harmful gases are present, and avoid direct sunlight.
- ●Reinspect the devices for rust in leads and solderability after stored for a long time.

■ Cautions for Characteristic Tests and Handling

On characteristics test at incoming inspection, etc, take good care to avoid the surge voltages from the test equipment, the short circuit at terminals, or the wrong connection.

■ Silicone Grease

When using a heatsink, please coat thinly and evenly the back surface of the device and both surfaces of the insulating plate with silicone grease to lower the thermal resistance between the device and the heatsink.
Please select proper silicone grease carefully since the oil in some grease products may penetrate the device and result in an extremely short device life.
Recommended Silicone Grease
- G-746 (Shin-Etsu Chemical)
- YG6260 (Momentive Performance Materials Inc.)
- SC102 (Dow Corning Toray Silicone)

■ Mounting Torque

When mounting torque is insufficient, thermal resistance increases, and so heat radiation effect is decreased. When the torque is excessive, the screw may be broken, the heatsink may be deformed, and the device frame may be distorted, resulting in the device damage. Recommended mounting torque per package is as follows:

● Mounting Torque Table

Package	Screw Torque
TO-220 (MT-25)	0.490 to 0.686 N•m (5 to 7kgf•cm)
TO-220F (FM20)	
TO-3P (MT-100)	0.686 to 0.882 N•m (7 to 9kgf•cm)
TO-3PF(FM100)	
MT-200 (fixed at two points)	
SIP with Fin (SLA)	0.588 to 0.784 N•m (6 to 8kgf•cm)

* When the surface of a heatsink where Full Mold package is to be mounted is not flat due to the burred metal bracket for screwing around the mounting hole of the heatsink, the resin of the package might be cracked even if the torque is lower than the recommended value.

* When a screw is fastened with an air driver for the Full Mold package, a large impact is generated at the time of stop, and the resin may crack even if the torque is lower than the recommended value. An electric driver, therefore, should be used instead of an air driver.

■ Heatsink

A larger contact area between the device and the heatsink is required for more effective heat radiation. To ensure a larger contact area, minimize mounting holes. And select a heatsink with a surface smooth enough and free from burrs and slivers.

■ Soldering Temperature

In general, the device mounted on a printed circuit board is subjected to high temperatures from flow solder in a solder bath, or, from a soldering iron at hand soldering.
The testing method and test conditions (JIS-C-7021 standards) for a device's heat resistance to soldering are:
At a distance of 1.5mm from the device's main body, apply 260°C for 10 seconds, and 350°C for 3 seconds.
Please observe these limits and finish soldering in as short a time as possible.

■ Antistatic Measure for Power MOS FET Arrays

- ●When handling the device, body grounding is necessary. Wear a wrist strap with a 1 MΩ resistor close to the body in the wrist strap to prevent electric shock.
- ●Use a conductive tablemat and a floor mat at the device-handling workbench and ground them properly.
- ●When using a curve tracer or other measuring equipment, ground them as well.
- ●In soldering, ground the soldering iron tip and the solder bath to prevent a leakage voltage from damaging the device.
- ●As an antistatic measure for device containers, use Sanken shipping containers or a conductive containers, or use aluminum foils.
  Since reliability can be affected adversely by improper storage environment or handling methods during Characteristic tests, please observe the following cautions.

Selection Guide

V_{CEO}-I_C

Collector–Emitter Voltage V_{CEO}(V)	2	3	4	5	6	7	8	10	12	14	15	16	17	18	25
800		C4304 C4445		C4300		C4301									
600										C4706					
550				C4518 C4518A C5287				C3927							
400				C5130		C4546		C4138	C5071					C4140	
380					D2141										
250					D2017										
230											A1294 C3263 A2151A C6011A 2SA2223 2SC6145		A1295 C3264		
200	A1668 C4382	D2016									A1493 C3857 A2151 C6011		A1494 C3858		
180	A1859A C4883A										A1386A A1492 A1673 C3519A C3856 C4388		A1216 C2922		
160											A1215 A1386 C2921 C3519				
150	A1667 A1859 C4381 C4883						B1559 B1587 D2389 D2438	A1186 B1560 B1588 C2837 D2390 D2439	B1570 D2401	A1303 A1860 C3284 C4886	B1647 B1649 D2560 D2562		B1648 D2561		
140								A1695 A1909 C4468 C5101							
120			D2015		D1785 D2045	C3835 C4153	A1694 A1908 C4467 C5100	B1259 D2081				B1382 B1420 D2082			B1383 D2083
110					D2641 D2642 D2643										
100					B1258										
80		C3852A	A1488A C3851A D2014		A1693 A1725 A1907 C4466 C4511 C5099										
60		C3852	A1488 B1257 C3851 D1796						A1568 B1351						
50		C4495						C4024	A1567 A1746		C4131				

Collector Current Ic(A)

Audio Transistors

■Output Transistors

Pc (W)	Ic (A)	V_{CEO} (V)	Chip						Package
			Single Transistors				Darlington		
			General		LAPT				
30	6	80	2SA1725	2SC4511					TO-220F (FM20)
60	6	80	2SA1693	2SC4466					TO-3P (MT-100)
	6	80	2SA1907	2SC5099					TO-3PF (FM100)
75	8	120	2SA1908	2SC5100					TO-3PF (FM100)
	8	150					2SB1587	2SD2438	TO-3PF (FM100)
80	8	120	2SA1694	2SC4467					TO-3P (MT-100)
	10	140	2SA1909	2SC5101					TO-3PF (FM100)
	8	150					2SB1559	2SD2389	TO-3P (MT-100)
	10	150					2SB1588	2SD2439	TO-3PF (FM100)
	14	150			2SA1860	2SC4886			TO-3PF (FM100)
85	15	150					2SB1649	2SD2562	TO-3PF (FM100)
	15	180	2SA1673	2SC4388					TO-3PF (FM100)
100	10	140	2SA1695	2SC4468					TO-3P (MT-100)
	10	150			2SA1186	2SC2837			TO-3P (MT-100)
	10	150					2SB1560	2SD2390	TO-3P (MT-100)
125	14	150			2SA1303	2SC3284			TO-3P (MT-100)
130	15	150					2SB1647	2SD2560	TO-3P (MT-100)
	15	160			2SA1386	2SC3519			TO-3P (MT-100)
	15	180	2SA1492	2SC3856					TO-3P (MT-100)
	15	180			2SA1386A	2SC3519A			TO-3P (MT-100)
	15	230			2SA1294	2SC3263			TO-3P (MT-100)
150	12	150					2SB1570	2SD2401	MT-200 (fixed at two points)
	15	160			2SA1215	2SC2921			MT-200 (fixed at two points)
	15	200	2SA1493	2SC3857					MT-200 (fixed at two points)
160	15	200	2SA2151	2SC6011					TO-3P (MT-100)
	15	230	2SA2151A	2SC6011A					TO-3P (MT-100)
	15	230	2SA2223	2SC6145					TO-3P (MT-100)
200	17	150					2SB1648	2SD2561	MT-200 (fixed at two points)
	17	180			2SA1216	2SC2922			MT-200 (fixed at two points)
	17	200	2SA1494	2SC3858					MT-200 (fixed at two points)
	17	230			2SA1295	2SC3264			MT-200 (fixed at two points)

LAPT: Multi-Emitter for High Frequency

■Output Transistors with Temperature Compensating Function (Refer to our Web site for applications)

Part Number		Pc (W)	Ic (A)	V_{CEO} (V)	Package
STD01P	STD01N	100	10	150	TO3P-5pin
STD03P	STD03N	160	15	160	TO3P-5pin

■Driver and Temperature Compensating Transistors

Part Number		Pc (W)	V_{CEO} (V)	Ic (A)	h_{FE} (min)	f_T (MHz)	Package	Remarks
2SC4495		25	50	3	500	40	TO-220F (FM20)	For temperature compensation
2SA1859	2SC4883	20	150	2	60	60/120	TO-220F (FM20)	Driver
2SA1859A	2SC4883A	20	180	2	60	60/120	TO-220F (FM20)	Driver
2SA1667	2SC4381	25	150	2	60	20/15	TO-220F (FM20)	Driver
2SA1668	2SC4382	25	200	2	60	20/15	TO-220F (FM20)	Driver

Refer to our Web site for the h_{FE} ranks.

Switching Transistors

■DC-DC Converter

Part Number	V_{CBO} (V)	V_{CEO} (V)	I_C (A)	P_C (W)	Package
2SC4024	100	50	10	35	TO-220F
2SC4131			15	60	TO-3PF
2SC4153	200	120	7	30	TO-220F
2SC3835				70	TO-3P

■For AC100V Input

Part Number	V_{CBO} (V)	V_{CEO} (V)	I_C (A)	P_C (W)	Package
2SC4138	500	400	10	80	TO-3P
2SC5071			12	100	TO-3P
2SC4140			18	130	TO-3P
2SC5130	600	400	5	30	TO-220F
2SC4546			7	30	TO-220F

■For AC200V Input

Part Number	V_{CBO} (V)	V_{CEO} (V)	I_C (A)	P_C (W)	Package
2SC4518	900	550	5	35	TO-220F
2SC5287				80	TO-3P
2SC3927			10	120	TO-3P
2SC4706		600	14	130	TO-3P
2SC4304		800	3	35	TO-220F
2SC4445				60	TO-3PF
2SC4300			5	75	TO-3PF
2SC4301			7	80	TO-3PF
2SC4518A	1000	550	5	35	TO-220F

Specifications List by Part Number

Part Number	Applications	Absolute Maximum Ratings									
		V_{CBO}	V_{CEO}	I_C	P_C	I_{CBO}		h_{FE}			
							Conditions			Conditions	
							V_{CB}			V_{CE}	I_C
		(V)	(V)	(A)	(W)	(μA)	(V)	min	max	(V)	(A)
2SA1186	Audio, general-purpose	–150	–150	–10	100	–100	–150	50	180	–4	–3
2SA1215	Audio, general-purpose	–160	–160	–15	150	–100	–160	50	180	–4	–5
2SA1216	Audio, general-purpose	–180	–180	–17	200	–100	–180	30	180	–4	–8
2SA1294	Audio, general-purpose	–230	–230	–15	130	–100	–230	50	140	–4	–5
2SA1295	Audio, general-purpose	–230	–230	–17	200	–100	–230	50	140	–4	–5
2SA1303	Audio, general-purpose	–150	–150	–14	125	–100	–150	50	180	–4	–5
2SA1386	Audio, general-purpose	–160	–160	–15	130	–100	–160	50	180	–4	–5
2SA1386A	Audio, general-purpose	–180	–180	–15	130	–100	–180	50	180	–4	–5
2SA1488	Audio, general-purpose	–60	–60	–4	25	–100	–60	40		–4	–1
2SA1488A	Audio, general-purpose	–80	–80	–4	25	–100	–80	40		–4	–1
2SA1492	Audio, general-purpose	–180	–180	–15	130	–100	–180	50	180	–4	–3
2SA1493	Audio, general-purpose	–200	–200	–15	150	–100	–200	50	180	–4	–5
2SA1494	Audio, general-purpose	–200	–200	–17	200	–100	–200	50	180	–4	–8
2SA1567	DC motor driver, chopper regulator, general-purpose	–50	–50	–12	35	–100	–50	50		–1	–6
2SA1568	DC motor driver, chopper regulator, general-purpose	–60	–60	±12	35	–100	–60	50		–1	–6
2SA1667	TV vertical output, audio output driver, general-purpose	–150	–150	–2	25	–10	–150	60		–10	–0.7
2SA1668	TV vertical output, audio output driver, general-purpose	–200	–200	–2	25	–10	–200	60		–10	–0.7
2SA1673	Audio, general-purpose	–180	–180	–15	85	–10	–180	50	180	–4	–3
2SA1693	Audio, general-purpose	–80	–80	–6	60	–10	–80	50	180	–4	–2
2SA1694	Audio, general-purpose	–120	–120	–8	80	–10	–120	50	180	–4	–3
2SA1695	Audio, general-purpose	–140	–140	–10	100	–10	–140	50	180	–4	–3
2SA1725	Audio, general-purpose	–80	–80	–6	30	–10	–80	50	180	–4	–2
2SA1746	Chopper regulator, switch, general-purpose	–70	–50	–12 (Pulse –20)	60	–10	–70	50		–1	–5
2SA1859	Audio output driver, TV velocity modulation	–150	–150	–2	20	–10	–150	60	240	–10	–0.7
2SA1859A	Audio output driver, TV velocity modulation	–180	–180	–2	20	–10	–180	60	240	–10	–0.7
2SA1860	Audio, general-purpose	–150	–150	–14	80	–100	–150	50	180	–4	–5
2SA1907	Audio, general-purpose	–80	–80	–6	60	–10	–80	50	180	–4	–2
2SA1908	Audio, general-purpose	–120	–120	–8	75	–10	–120	50	180	–4	–3
2SA1909	Audio, general-purpose	–140	–140	–10	80	–10	–140	50	180	–4	–3
2SA2151	Audio, general-purpose	–200	–200	–15	160	–10	–200	50	180	–4	–3
2SA2151A	Audio, general-purpose	–230	–230	–15	160	–10	–230	50	180	–4	–3
2SA2223	Audio, general-purpose	–230	–230	–15	160	–10	–230	40	140	–4	–5
2SB1257	Solenoid/relay/motor driver, general-purpose	–60	–60	–4 (Pulse –6)	25	–10	–60	2000		–4	–3
2SB1258	Solenoid/relay/motor driver, general-purpose	–100	–100	–6 (Pulse –10)	30	–10	–100	1000		–2	–3
2SB1259	Solenoid/relay/motor driver, general-purpose	–120	–120	–10 (Pulse –15)	30	–10	–120	2000		–4	–5
2SB1351	Printer head/solenoid/relay/motor driver, general-purpose	–60	–60	–12 (Pulse –20)	30	–10	–60	2000		–4	–10
2SB1382	Chopper regulator, DC motor driver, general-purpose	–120	–120	–16 (Pulse –26)	75	–10	–120	2000		–4	–8
2SB1383	Chopper regulator, DC motor driver, general-purpose	–120	–120	–25 (Pulse –40)	120	–10	–120	2000		–4	–12
2SB1420	Chopper regulator, DC motor driver, general-purpose	–120	–120	–16 (Pulse –26)	80	–10	–120	2000		–4	–8
2SB1559	Audio, series regulator, general-purpose	–160	–150	–8	80	–100	–160	5000	30000	–4	–6
2SB1560	Audio, series regulator, general-purpose	–160	–150	–10	100	–100	–160	5000	30000	–4	–7
2SB1570	Audio, series regulator, general-purpose	–160	–150	–12	150	–100	–160	5000	30000	–4	–7
2SB1587	Audio, series regulator, general-purpose	–160	–150	–8	75	–100	–160	5000	30000	–4	–6
2SB1588	Audio, series regulator, general-purpose	–160	–150	–10	80	–100	–160	5000	30000	–4	–7
2SB1647	Audio, series regulator, general-purpose	–150	–150	–15	130	–100	–150	5000	30000	–4	–10
2SB1648	Audio, series regulator, general-purpose	–150	–150	–17	200	–100	–150	5000	30000	–4	–10
2SB1649	Audio, series regulator, general-purpose	–150	–150	–15	85	–100	–150	5000	30000	–4	–10

Electrical Characteristics												Complementary	Package	Mass
	$V_{CE(sat)}$	$V_{BE(sat)}$			fT			Switching Time			Cob			
			Conditions			Conditions		t_{on}	t_{stg}	t_f				
	(V)	(V)	Ic	I_B	MHz	V_{CE}	I_E	(μS)	(μS)	(μS)	(pF)			(g)
	max	max	(A)	(A)		(V)	(A)							
	–2.0		–5	–0.5	60	–12	1	0.25typ	0.8typ	0.2typ	110typ	2SC2837	TO-3P (MT-100)	6.0
	–2.0		–5	–0.5	50	–12	2	0.25typ	0.85typ	0.2typ	400typ	2SC2921	MT-200	18.4
	–2.0		–8	–0.8	40	–12	2	0.3typ	0.7typ	0.2typ	500typ	2SC2922	MT-200	18.4
	–2.0		–5	–0.5	35	–12	2	0.35typ	1.5typ	0.3typ	500typ	2SC3263	TO-3P (MT-100)	6.0
	–2.0		–5	–0.5	35	–12	2	0.35typ	1.5typ	0.3typ	500typ	2SC3264	MT-200	18.4
	–2.0		–5	–0.5	50	–12	2	0.25typ	0.85typ	0.2typ	400typ	2SC3284	TO-3P (MT-100)	6.0
	–2.0		–5	–0.5	40	–12	2	0.3typ	0.7typ	0.2typ	500typ	2SC3519	TO-3P (MT-100)	6.0
	–2.0		–5	–0.5	40	–12	2	0.3typ	0.7typ	0.2typ	500typ	2SC3519A	TO-3P (MT-100)	6.0
	–0.5		–2	–0.2	15	–12	0.2	0.25typ	0.75typ	0.25typ	90typ	2SC3851	TO-220F (FM20)	2.0
	–0.5		–2	–0.2	15	–12	0.2	0.25typ	0.75typ	0.25typ	90typ	2SC3851A	TO-220F (FM20)	2.0
	–2.0		–5	–0.5	20	–12	0.5	0.6typ	0.9typ	0.2typ	500typ	2SC3856	TO-3P (MT-100)	6.0
	–3.0		–10	–1	20	–12	0.5	0.3typ	0.9typ	0.2typ	400typ	2SC3857	MT-200	18.4
	–2.5		–10	–1	20	–12	1	0.6typ	0.9typ	0.2typ	500typ	2SC3858	MT-200	18.4
	–0.35		–6	–0.3	40	–12	0.5	0.4typ	0.4typ	0.2typ	330typ		TO-220F (FM20)	2.0
	–0.35		–6	–0.3	40	–12	0.5	0.4typ	0.4typ	0.2typ	330typ		TO-220F (FM20)	2.0
	–1.0		–0.7	–0.07	20	–12	0.2	0.4typ	1.5typ	0.5typ	60typ	2SC4381	TO-220F (FM20)	2.0
	–1.0		–0.7	–0.07	20	–12	0.2	0.4typ	1.5typ	0.5typ	60typ	2SC4382	TO-220F (FM20)	2.0
	–2.0		–5	–0.5	20	–12	0.5	0.6typ	0.9typ	0.2typ	500typ	2SC4388	TO-3PF (FM100)	6.5
	–1.5		–2	–0.2	20	–12	0.5	0.18typ	1.1typ	0.21typ	150typ	2SC4466	TO-3P (MT-100)	6.0
	–1.5		–3	–0.3	20	–12	0.5	0.14typ	1.4typ	0.21typ	300typ	2SC4467	TO-3P (MT-100)	6.0
	–0.5		–5	–0.5	20	–12	0.5	0.17typ	1.86typ	0.27typ	400typ	2SC4468	TO-3P (MT-100)	6.0
	–0.5		–2	–0.2	20	–12	0.5	0.18typ	1.1typ	0.21typ	150typ	2SC4511	TO-220F (FM20)	2.0
	–0.5	–1.2	–5	–0.08	25	–12	1	0.5typ	0.6typ	0.3typ	400typ		TO-3PF (FM100)	6.5
	–1.0		–0.7	–0.07	60	–12	0.7	0.5typ	1typ	0.5typ	30typ	2SC4883	TO-220F (FM20)	2.0
	–1.0		–0.7	–0.07	60	–12	0.7	0.5typ	1typ	0.5typ	30typ	2SC4883A	TO-220F (FM20)	2.0
	–2.0		–5	–0.5	50	–12	2	0.25typ	0.85typ	0.2typ	400typ	2SC4886	TO-3PF (FM100)	6.5
	–0.5		–12	–0.2	20	–12	0.5	0.18typ	1.1typ	0.21typ	150typ	2SC5099	TO-3PF (FM100)	6.5
	–0.5		–3	–0.3	20	–12	0.5	0.14typ	1.4typ	0.21typ	300typ	2SC5100	TO-3PF (FM100)	6.5
	–0.5		–5	–0.5	20	–12	0.5	0.17typ	1.86typ	0.27typ	400typ	2SC5101	TO-3PF (FM100)	6.5
	–0.5		–5	–0.5	20	–12	–0.5	–	–	–	450typ	2SC6011	TO-3P (MT-100)	6.0
	–0.5		–5	–0.5	20	–12	–0.5	–	–	–	450typ	2SC6011A	TO-3P (MT-100)	6.0
	–0.5		–5	–0.5	35	–12	2	–	–	–	500typ	2SC6145	TP-3P (MT-100)	6.0
	–1.5	–2.0	–3	–0.006	200	–12	0.2	0.4typ	0.8typ	0.6typ	75typ	2SD2014	TO-220F (FM20)	2.0
	–1.5	–2.0	–3	–0.006	100	–12	0.2	0.6typ	1.6typ	0.5typ	100typ	2SD1785	TO-220F (FM20)	2.0
	–1.5	–2.0	–5	–0.01	100	–12	0.2	0.6typ	1.6typ	0.5typ	145typ	2SD2081	TO-220F (FM20)	2.0
	–1.5	–2.0	–10	–0.02	130	–12	1	0.7typ	1.5typ	0.6typ	170typ		TO-220F (FM20)	2.0
	–1.5	–2.5	–8	–0.016	50	–12	1	0.8typ	1.8typ	1typ	350typ	2SD2082	TO-3PF (FM100)	6.5
	–1.8	–2.5	–12	–0.024	50	–12	1	1typ	3typ	1typ	230typ	2SD2083	TO-3P (MT-100)	6.0
	–1.5	–2.5	–8	–0.016	50	–12	1	1typ	3typ	1typ	350typ		TO-3P (MT-100)	6.0
	–2.5	–3.0	–6	–0.006	65	–12	1	0.7typ	3.6typ	0.9typ	160typ	2SD2389	TO-3P (MT-100)	6.0
	–2.5	–3.0	–7	–0.007	50	–12	2	0.8typ	3typ	1.2typ	230typ	2SD2390	TO-3P (MT-100)	6.0
	–2.5	–3.0	–7	–0.007	50	–12	2	0.8typ	3typ	1.2typ	230typ	2SD2401	MT-200	18.4
	–2.5	–3.0	–6	–0.006	65	–12	1	0.7typ	3.6typ	0.9typ	160typ	2SD2438	TO-3PF (FM100)	6.5
	–2.5	–3.0	–7	–0.007	50	–12	2	0.8typ	3typ	1.2typ	230typ	2SD2439	TO-3PF (FM100)	6.5
	–2.5	–3.0	–10	–0.01	45	–12	2	0.7typ	1.6typ	1.1typ	320typ	2SD2560	TO-3P (MT-100)	6.0
	–2.5	–3.0	–10	–0.01	45	–12	2	0.7typ	1.6typ	1.1typ	320typ	2SD2561	MT-200	18.4
	–2.5	–3.0	–10	–0.01	45	–12	2	0.7typ	1.6typ	1.1typ	320typ	2SD2562	TO-3PF (FM100)	6.5

Part Number	Applications	Absolute Maximum Ratings									
		V_{CBO}	V_{CEO}	I_C	P_C	I_{CBO}	Conditions	h_{FE}		Conditions	
		(V)	(V)	(A)	(W)	(μA)	V_{CB} (V)	min	max	V_{CE} (V)	I_C (A)
2SC2837	Audio, general-purpose	150	150	10	100	100	150	50	180	4	3
2SC2921	Audio, general-purpose	160	160	15	150	100	160	50	180	4	5
2SC2922	Audio, general-purpose	180	180	17	200	100	180	30	180	4	8
2SC3263	Audio, general-purpose	230	230	15	130	100	230	50	140	4	5
2SC3264	Audio, general-purpose	230	230	17	200	100	230	50	140	4	5
2SC3284	Audio, general-purpose	150	150	14	125	100	150	50	180	4	5
2SC3519	Audio, general-purpose	160	160	15	130	100	160	50	180	4	5
2SC3519A	Audio, general-purpose	180	180	15	130	100	180	50	180	4	5
2SC3835	Humidifier, DC-DC converter, general-purpose	200	120	7 (Pulse 14)	70	100	200	70	220	4	3
2SC3851	Audio, PPC high voltage power supply, general-purpose	80	60	4	25	100	80	40	320	4	1
2SC3851A	Audio, PPC high voltage power supply, general-purpose	100	80	4	25	100	100	40	320	4	1
2SC3852	Solenoid/motor driver/series regulator, general-purpose	80	60	3	25	10	80	500		4	0.5
2SC3852A	Solenoid/motor driver/series regulator, general-purpose	100	80	3	25	10	100	500		4	0.5
2SC3856	Audio, general-purpose	200	180	15	130	100	200	80	180	4	3
2SC3857	Audio, general-purpose	200	200	15	150	100	200	50	180	4	5
2SC3858	Audio, general-purpose	200	200	17	200	100	200	50	180	4	8
2SC3927	Switching regulator, general-purpose	900	550	10 (Pulse 15)	120	100	800	10	28	4	5
2SC4024	DC-DC converter, emergency lamp inverter, general-purpose	100	50	10	35	100	100	300	1600	4	1
2SC4131	DC-DC converter, emergency lamp inverter, general-purpose	100	50	15 (Pulse 20)	60	10	100	60	360	1	5
2SC4138	Switching regulator, general-purpose	500	400	10 (Pulse 20)	80	100	500	10	30	4	6
2SC4140	Switching regulator, general-purpose	500	400	18 (Pulse 36)	130	100	500	10	30	4	10
2SC4153	Humidifier, DC-DC converter, general-purpose	200	120	7 (Pulse 14)	30	100	200	70	220	4	3
2SC4300	Switching regulator, general-purpose	900	800	5 (Pulse 10)	75	100	800	10	30	4	2
2SC4301	Switching regulator, lighting inverter, general-purpose	900	800	7 (Pulse 14)	80	100	800	10	30	4	3
2SC4304	Switching regulator, general-purpose	900	800	3 (Pulse 6)	35	100	800	10	30	4	0.7
2SC4381	TV vertical output, audio output driver, general-purpose	150	150	2	25	10	150	60		10	0.7
2SC4382	TV vertical output, audio output driver, general-purpose	200	200	2	25	10	200	60		10	0.7
2SC4388	Audio, general-purpose	200	180	15	85	10	200	50	180	4	3
2SC4445	Switching regulator, general-purpose	900	800	3 (Pulse 6)	60	100	800	10	30	4	0.7
2SC4466	Audio, general-purpose	120	80	6	60	10	120	50	180	4	2
2SC4467	Audio, general-purpose	160	120	8	80	10	160	50	180	4	3
2SC4468	Audio, general-purpose	200	140	10	100	10	200	50	180	4	3
2SC4495	For audio temperature compensation, general-purpose	80	50	3	25	10	80	500		4	0.5
2SC4511	Audio, general-purpose	120	80	6	30	10	120	50	180	4	2
2SC4518	Switching regulator, lighting inverter, general-purpose	900	550	5 (Pulse 10)	35	100	800	10	25	4	1.8
2SC4518A	Switching regulator, lighting inverter, general-purpose	1000	550	5 (Pulse 10)	35	100	800	10	25	4	1.8
2SC4546	Switching regulator, lighting inverter, general-purpose	600	400	7 (Pulse 14)	30	100	600	10	25	4	3
2SC4706	Switching regulator, general-purpose	900	600	14 (Pulse 28)	130	100	800	10	25	4	7
2SC4883	Audio output driver, TV velocity modulation	150	150	2	20	10	150	60	240	10	0.7
2SC4883A	Audio output driver, TV velocity modulation	180	180	2	20	10	180	60	240	10	0.7
2SC4886	Audio, general-purpose	150	150	14	80	100	150	50	180	4	5
2SC5071	Switching regulator, general-purpose	500	400	12 (Pulse 24)	100	100	500	10	30	4	7
2SC5099	Audio, general-purpose	120	80	6	60	10	120	50	180	4	2
2SC5100	Audio, general-purpose	160	120	8	75	10	160	50	180	4	3
2SC5101	Audio, general-purpose	200	140	10	80	10	200	50	180	4	3
2SC5130	Switching regulator, general-purpose	600	400	5 (Pulse 10)	30	100	500	10	30	4	1.5
2SC5287	Switching regulator, general-purpose	900	550	5 (Pulse 10)	80	100	800	10	25	4	1.8
2SC6011	Audio, general-purpose	200	200	15	160	10	200	50	180	4	3
2SC6011A	Audio, general-purpose	230	230	15	160	10	230	50	180	4	3
2SC6145	Audio, general-purpose	230	230	15	160	10	230	40	140	4	5

Electrical Characteristics											Complementary	Package	Mass
$V_{CE\ (sat)}$	$V_{BE\ (sat)}$			fT			Switching Time			Cob			
		Conditions			Conditions		t_{on}	t_{stg}	t_f				
(V)	(V)	I_C	I_B	MHz	V_{CE}	I_E	(μS)	(μS)	(μS)	(pF)			(g)
max	max	(A)	(A)		(V)	(A)							
2.0		5	0.5	70	12	–1	0.2typ	1.4typ	0.35typ	60typ	2SA1186	TO-3P (MT-100)	6.0
2.0		5	0.5	60	12	–2	0.2typ	1.5typ	0.35typ	200typ	2SA1215	MT-200	18.4
2.0		8	0.8	50	12	–2	0.2typ	1.3typ	0.45typ	250typ	2SA1216	MT-200	18.4
2.0		5	0.5	60	12	–2	0.3typ	2.4typ	0.5typ	250typ	2SA1294	TO-3P (MT-100)	6.0
2.0		5	0.5	60	12	–2	0.3typ	2.4typ	0.5typ	250typ	2SA1295	MT-200	18.4
2.0		5	0.5	60	12	–2	0.2typ	1.5typ	0.35typ	200typ	2SA1303	TO-3P (MT-100)	6.0
2.0		5	0.5	50	12	–2	0.2typ	1.3typ	0.45typ	250typ	2SA1386	TO-3P (MT-100)	6.0
2.0		5	0.5	50	12	–2	0.2typ	1.3typ	0.45typ	250typ	2SA1386A	TO-3P (MT-100)	6.0
0.5	1.2	3	0.3	30	12	–0.5	0.5max	3max	0.5max	110typ		TO-3P (MT-100)	6.0
0.5		2	0.2	15	12	–0.2	0.2typ	1typ	0.3typ	60typ	2SA1488	TO-220F (FM20)	2.0
0.5		2	0.2	15	12	–0.2	0.2typ	1typ	0.3typ	60typ	2SA1488A	TO-220F (FM20)	2.0
0.5		2	0.05	15	12	–0.2	0.8typ	3typ	1.2typ	50typ		TO-220F (FM20)	2.0
0.5		2	0.05	15	12	–0.2	0.8typ	3typ	1.2typ	50typ		TO-220F (FM20)	2.0
2.0		5	0.5	20	12	–0.5	0.5typ	1.8typ	0.6typ	300typ	2SA1492	TO-3P (MT-100)	6.0
3.0		10	1	20	12	–0.5	0.3typ	2.4typ	0.4typ	250typ	2SA1493	MT-200	18.4
2.5		10	1	20	12	–1	0.5typ	1.8typ	0.6typ	300typ	2SA1494	MT-200	18.4
0.5	1.2	5	1	6	12	–1	1max	5max	0.5max	105typ		TO-3P (MT-100)	6.0
0.5		5	0.1	24	12	–0.5	0.5typ	2typ	0.5typ	150typ		TO-220F (FM20)	2.0
0.5	1.2	5	0.08	18	12	–1	0.5typ	2typ	0.4typ	210typ		TO-3PF (FM100)	6.5
0.5	1.3	6	1.2	10	12	–0.7	1max	3max	0.5max	85typ		TO-3P (MT-100)	6.0
0.5	1.3	10	2	10	12	–2.0	1max	3max	0.5max	165typ		TO-3P (MT-100)	6.0
0.5	1.2	3	0.3	30	12	–0.5	0.5max	3max	0.5max	110typ		TO-220F (FM20)	2.0
0.5	1.2	2	0.4	6	12	–0.5	1max	5max	1max	75typ		TO-3PF (FM100)	6.5
0.5	1.2	3	0.6	6	12	–1	1max	5max	1max	105typ		TO-3PF (FM100)	6.5
0.5	1.2	7	0.14	15	12	–0.3	0.7max	4max	0.7max	50typ		TO-220F (FM20)	2.0
1.0		7	0.07	15	12	–0.2	1typ	3typ	1.5typ	35	2SA1667	TO-220F (FM20)	2.0
1.0		7	0.07	15	12	–0.2	1typ	3typ	1.5typ	35	2SA1668	TO-220F (FM20)	2.0
2.0		5	0.5	20	12	–0.5	0.5max	1.8max	0.6max	300	2SA1673	TO-3PF (FM100)	6.5
0.5	1.2	0.7	0.14	15	12	–0.3	0.7max	4max	0.7max	50		TO-3PF (FM100)	6.5
1.5		2	0.2	20	12	–0.5	0.16typ	2.6typ	0.34typ	110	2SA1693	TO-3P (MT-100)	6.0
1.5		3	0.3	20	12	–0.5	0.13typ	3.5typ	0.32typ	200	2SA1694	TO-3P (MT-100)	6.0
0.5		5	0.5	20	12	–0.5	0.24typ	4.32typ	0.4typ	250	2SA1695	TO-3P (MT-100)	6.0
0.5		4	0.02	40	12	–0.1	0.45typ	1.6typ	0.85typ	30		TO-220F (FM20)	2.0
0.5		2	0.2	20	12	–0.5	0.16typ	2.6typ	0.34typ	110	2SA1725	TO-220F (FM20)	2.0
0.5	1.2	1.8	0.36	6	12	–0.35	0.7max	4max	0.5max	50		TO-220F (FM20)	2.0
0.5	1.2	1.8	0.36	6	12	–0.35	0.7max	4max	0.5max	50		TO-220F (FM20)	2.0
0.7	1.3	3	0.6	10	12	–0.5	0.5max	2max	0.15max	55		TO-220F (FM20)	2.0
0.5	1.2	7	1.4	6	12	–1.5	1max	5max	0.7max	160		TO-3P (MT-100)	6.0
1.0		0.7	0.07	120	12	–0.7	0.5typ	1.5typ	0.5typ	30	2SA1859	TO-220F (FM20)	2.0
1.0		0.7	0.07	120	12	–0.7	0.5typ	1.5typ	0.5typ	30	2SA1859A	TO-220F (FM20)	2.0
2.0		5	0.5	60	12	–2	0.26typ	1.5typ	0.35typ	200	2SA1860	TO-3PF (FM100)	6.5
0.5	1.3	7	1.4	10	12	–1	1max	3max	0.5max	105		TO-3P (MT-100)	6.0
0.5		2	0.2	20	12	–0.5	0.16typ	2.6typ	0.34typ	110	2SA1907	TO-3PF (FM100)	6.5
0.5		3	0.3	20	12	–0.5	0.13typ	3.5typ	0.32typ	200	2SA1908	TO-3PF (FM100)	6.5
0.5		5	0.5	20	12	–0.5	0.24typ	4.32typ	0.4typ	250	2SA1909	TO-3PF (FM100)	6.5
0.5	1.3	1.5	0.3	20	12	–0.3	1max	2max	0.3max	30		TO-220F (FM20)	2.0
0.5	1.2	1.8	0.36	6	12	–0.35	0.7max	4max	0.5max	50		TO-3P (MT-100)	6.0
0.5		5	0.5	20	12	–0.5	–	–	–	270	2SA2151	TO-3P (MT-100)	6.0
0.5		5	0.5	20	12	–0.5	–	–	–	270	2SA2151A	TO-3P (MT-100)	6.0
0.5		5	0.5	60	12	–2	–	–	–	250	2SA2223	TP-3P (MT-100)	6.0

Part Number	Applications	Absolute Maximum Ratings									
		V_{CBO}	V_{CEO}	I_C	P_C	I_{CBO}		h_{FE}			
							Conditions			Conditions	
							V_{CB}			V_{CE}	I_C
		(V)	(V)	(A)	(W)	(μA)	(V)	min	max	(V)	(A)
2SD1785	Solenoid/relay/motor driver/series regulator, general-purpose	120	120	6 (Pulse 10)	30	10	120	2000		2	3
2SD1796	Solenoid/relay/motor driver, general-purpose	60±10	60±10	4	25	10	50	2000		4	3
2SD2014	Solenoid/relay/motor driver/series regulator, general-purpose	120	80	4	25	10	120	2000		2	3
2SD2015	Solenoid/relay/motor driver, general-purpose	150	120	4	25	10	150	2000		2	2
2SD2016	Igniter, relay, general-purpose	200	200	3	25	10	200	1000	15000	4	1
2SD2017	Solenoid/relay/motor driver, general-purpose	300	250	6	35	100	300	2000		2	2
2SD2045	Solenoid/motor driver, general-purpose	120	120	6 (Pulse 10)	50	10	120	2000		2	3
2SD2081	Solenoid/motor driver, general-purpose	120	120	10 (Pulse 15)	30	10	120	2000		4	5
2SD2082	Solenoid/motor driver, general-purpose	120	120	16 (Pulse 26)	75	10	120	2000		4	8
2SD2083	Solenoid/motor driver, general-purpose	120	120	25 (Pulse 40)	120	10	120	2000		4	12
2SD2141	Igniter, solenoid, motor driver, general-purpose	380±50	380±50	6 (Pulse 10)	35	10	330	1500		2	3
2SD2389	Audio, series regulator, general-purpose	160	150	8	80	100	160	5000	30000	4	6
2SD2390	Audio, series regulator, general-purpose	160	150	10	100	100	160	5000	30000	4	7
2SD2401	Audio, series regulator, general-purpose	160	150	12	150	100	160	5000	30000	4	7
2SD2438	Audio, series regulator, general-purpose	160	150	8	75	100	160	5000	30000	4	6
2SD2439	Audio, series regulator, general-purpose	160	150	10	80	100	160	5000	30000	4	7
2SD2560	Audio, series regulator, general-purpose	150	150	15	130	100	150	5000	30000	4	10
2SD2561	Audio, series regulator, general-purpose	150	150	17	200	100	150	5000	30000	4	10
2SD2562	Audio, series regulator, general-purpose	150	150	15	85	100	150	5000	30000	4	10
2SD2641	Series regulator, general-purpose	110	110	6	60	100	110	5000	30000	4	5
2SD2642	Series regulator, general-purpose	110	110	6	30	100	110	5000	30000	4	5
2SD2643	Series regulator, general-purpose	110	110	6	60	100	110	5000	30000	4	5
STD01N	Audio	150	150	10	100	100	150	5000	20000	4	6
STD01P	Audio	–150	–150	–10	100	–100	–150	5000	20000	–4	–6
STD03N	Audio	160	160	15	160	100	160	5000	20000	4	10
STD03P	Audio	–160	–160	–15	160	–100	–160	5000	20000	–4	–10

Electrical Characteristics												Complementary	Package	Mass
	$V_{CE\ (sat)}$	$V_{BE\ (sat)}$			fT			Switching Time			Cob			
			Conditions			Conditions		t_{on}	t_{stg}	t_f				
	(V)	(V)	Ic	I_B	MHz	V_{CE}	I_E	(μS)	(μS)	(μS)	(pF)			(g)
	max	max	(A)	(A)		(V)	(A)							
	1.5		2	3mA	100	12	–0.1	0.5typ	5.5typ	1.5typ	70	2SB1258	TO-220F (FM20)	2.0
	1.5		3	10mA	60	12	–0.2	1typ	4typ	1.5typ	45		TO-220F (FM20)	2.0
	1.5	2.0	3	3mA	75	12	–0.1	1typ	4typ	1.5typ	45	2SB1257	TO-220F (FM20)	2.0
	1.5	2.0	2	2mA	40	12	–0.1	0.6typ	5typ	2typ	40		TO-220F (FM20)	2.0
	1.5	2.0	1	1.5mA	90	12	–0.1				40		TO-220F (FM20)	2.0
	1.5	2.0	2	2mA	20	12	–1	0.6typ	16typ	3typ	65		TO-220F (FM20)	2.0
	1.5	2.0	3	3mA	50	12	–1	0.5typ	5.5typ	1.5typ	70		TO-3PF (FM100)	6.5
	1.5	2.0	5	5mA	60	12	–0.5				95	2SB1259	TO-220F (FM20)	2.0
	1.5	2.5	8	16mA	20	12	–1	0.6typ	7typ	1.5typ	210	2SB1382	TO-3PF (FM100)	6.5
	1.8	2.5	12	24mA	20	12	–1	1typ	6typ	1typ	340	2SB1383	TO-3P (MT-100)	6.0
	1.5		4	20mA	20	12	–0.5				95		TO-220F (FM20)	2.0
	2.5	3.0	6	6mA	80	12	–1	0.6typ	10typ	0.9typ	85	2SB1559	TO-3P (MT-100)	6.0
	2.5	3.0	7	7mA	55	12	–2	0.5typ	10typ	1.1typ	95	2SB1560	TO-3P (MT-100)	6.0
	2.5	3.0	7	7mA	55	12	–2	0.5typ	10typ	1.1typ	95	2SB1570	MT-200	18.4
	2.5	3.0	6	6mA	80	12	–1	0.6typ	10typ	0.9typ	85	2SB1587	TO-3PF (FM100)	6.5
	2.5	3.0	7	7mA	55	12	–2	0.5typ	10typ	1.1typ	95	2SB1588	TO-3PF (FM100)	6.5
	2.5	3.0	10	10mA	70	12	–2	0.8typ	4typ	1.2typ	120	2SB1647	TO-3P (MT-100)	6.0
	2.5	3.0	10	10mA	70	12	–2	0.8typ	4typ	1.2typ	120	2SB1648	MT-200	18.4
	2.5	3.0	10	10mA	70	12	–2	0.8typ	4typ	1.2typ	120	2SB1649	TO-3PF (FM100)	6.5
	2.5	3.0	5	5mA	60	12	–2	0.8typ	6.2typ	1.1typ	55		TO-3P (MT-100)	6.0
	2.5	3.0	5	5mA	60	12	–0.5	0.8typ	6.2typ	1.1typ	55		TO-220F (FM20)	2.0
	2.5	3.0	5	5mA	60	12	–0.5	0.8typ	6.2typ	1.1typ	55		TO-3PF (FM100)	6.5
	2.0	2.5	6	6mA								STD01P	TO3P-5Pin	6.2
	–2.0	–2.5	–6	–6mA								STD01N	TO3P-5Pin	6.2
	2.0	2.5	10	10mA								STD03P	TO-3P-5pin	6.2
	–2.0	–2.5	–10	–10mA								STD03N	TO-3P-5pin	6.2

Selection Guide

By V_{DSS}

V_{DSS} (V)	R_{DS} (ON) (Ω) max	I_D (A)	P_D (W)	Part Number	Package
40	6.0m	±70	80	2SK3800	TO220S (Surface-mount)
	6.0m	±70	100	2SK3801	TO3P(MT100)
	9m	±60	60	FKV460S	TO220S (Surface-mount)
50	10m	±75	40	FKV575	TO220F(FM20)
	13m	±50	35	FKV550T	TO220F(FM20)
	15m	±50	35	FKV550N	TO220F(FM20)
	15m	±50	85	EKV550	TO220
60	6.0m	±70	90	2SK3710A	TO220S (Surface-mount)
	6.0m	±70	130	2SK3711	TO3P(MT100)
	14m	±60	60	FKV660S	TO220S (Surface-mount)
	28m	±30	40	2SK2420	TO220F(FM20)
100	80m	±20	35	2SK2779	TO220F(FM20)
	0.175	±12	30	2SK2778	TO220F(FM20)
200	53m	±45	40	FKP202	TO220F(FM20)
	53m	±45	95	SKP202	TO263 (Surface-mount)
	0.175	±18	35	2SK3003	TO220F(FM20)
250	43m	±50	85	FKP250A	TO3PF(FM100)
	75m	±25	40	FKP252	TO220F(FM20)
	95m	±20	40	FKP253	TO220F(FM20)
	95m	±20	40	SKP253	TO263 (Surface-mount)
	0.25	±18	35	2SK3004	TO220F(FM20)
280	53m	±40	85	FKP280A	TO3PF(FM100)
300	65m	±30	85	FKP300A	TO3PF(FM100)
330	63m	±30	85	FKP330C	TO3PF(FM100)
450	1.1	±7	35	2SK2701A	TO220F(FM20)
	2.8	±3	30	2SK2803	TO220F(FM20)
500	1.5	±5	30	2SK3199	TO220F(FM20)
600	3.8	±2	30	2SK2848	TO220F(FM20)
900	5.0	±3	30	2SK2943	TO220F(FM20)

Specifications List by Part Number

Part Number	Absolute Maximum Ratings														
	V_{DSS}	V_{GSS}	I_D	$I_{D\ (pulse)}$	P_D	E_{AS}	I_{GSS}		I_{DSS}			V_{TH}			
								Conditions			Conditions			Conditions	
	(V)	(V)	(A)	(A)	(W)	(mJ)	(nA) max	V_{GS} (V)	(μA) min	(μA) max	V_{DS} (V)	(V) min	(V) max	V_{DS} (V)	I_D (μA)
2SK2420	60	±20	±30	±120	40	38	±100	±20		100	60	2.0	4.0	10	250
2SK2701A	450	±30	±7	±28	35	130	±100	±30		100	450	2.0	4.0	10	1m
2SK2778	100	±20	±12	±48	30	70	±100	±20		100	100	1.0	2.0	10	250
2SK2779	100	±20	±20	±80	35	200	±100	±20		100	100	1.0	2.0	10	250
2SK2803	450	±30	±3	±12	30	30	±100	±30		100	450	2.0	4.0	10	1m
2SK2848	600	±30	±2	±8	30	10	±100	±30		100	600	2.0	4.0	10	250
2SK2943	900	±30	±3	±12	30	60	±100	±30		100	900	2.0	4.0	10	1m
2SK3003	200	±20	±18	±72	35	120	±100	±20		100	200	2.0	4.0	10	1m
2SK3004	250	±20	±18	±72	35	120	±100	±20		100	250	2.0	4.0	10	1m
2SK3199	500	±30	±5	±20	30	35	±100	±30		100	500	2.0	4.0	10	1m
2SK3710A	60	±20	±70	±140	90	468	±10μ	±15		100	60	2.0	4.0	10	1m
2SK3711	60	±20	±70	±140	130		±10μ	+15		100	60	2.0	4.0	10	1m
2SK3800	40	±20	±70	±140	80	400	±10	±15		100	40	2.0	4.0	10	1m
2SK3801	40	±20	±70	±140	100	400	±10	±15		100	40	2.0	4.0	10	1m
EKV550	50	±20	±50	±150	85	150	±10μ	±20		100	50	3.0	4.2	10	250
FKP202	200	±30	±45	±180	40	200	±100	±30		100	200	3.0	4.5	10	1m
FKP250A	250	±30	±50	±200	85	400	±100	±30		100	250	3.0	4.5	10	1m
FKP252	250	±30	±25	±100	40	200	±100	±30		100	250	3.0	4.5	10	1m
FKP253	250	±30	±20	± 80	40	160	±100	±30		100	250	3.0	4.5	10	1m
FKP280A	280	±30	±40	±160	85	400	±100	±30		100	280	3.0	4.5	10	1m
FKP300A	300	±30	±30	±120	85	400	±100	±30		100	300	3.0	4.5	10	1m
FKP330C	330	±30	±30	±120	85	500	±100	±30		100	330	3.0	4.5	10	1m
FKV460S	40	+20, –10	±60	±180	60		+10, –5μ	+20, –10		100	40	1.0	2.5	10	250
FKV550T	50	±20	±50	±150	35	150	±10μ	±20		100	50	1.0	2.5	10	250
FKV550N	50	±20	±50	±150	35	150	±10μ	±20		100	50	3.0	4.2	10	250
FKV575	50	±20	±75	±200	40	300	±100	±20		100	50	3.0	4.5	10	250
FKV660S	60	+20, –10	±60	±180	60		+10, –5μ	+20, –10		100	60	1.0	2.5	10	250
SKP202	200	±30	±45	±180	95	200	±100	±30		100	200	3.0	4.5	10	1m
SKP253	250	±30	±20	± 80	40	160	±100	±30		100	250	3.0	4.5	10	1m

Electrical Characteristics																Package	Mass
$R_{e\ (yfs)}$		Conditions		C_{iss}	C_{rss}	Conditions		$R_{DS\ (ON)}$		Conditions				Conditions			
(S)		V_{DS}	I_D	(pF)	(pF)	V_{GS}	V_{DS}	(Ω)		V_{GS}	I_D	(Ω)		V_{GS}	I_D		(g)
min	typ	(V)	(A)	typ	typ	(V)	(V)	typ	max	(V)	(A)	typ	max	(V)	(A)		
13	20	10	15	2200		0	25	21m	28m	10	15					TO220F(FM20)	2.0
3.5	5	20	3.5	720	62	0	10	0.84	1.1	10	3.5					TO220F(FM20)	2.0
7	11	10	6	740	75	0	10	105m	175m	10	6	130m	220m	4	6	TO220F(FM20)	2.0
12	20	10	10	1630	180	0	10	60m	80m	10	10	75m	95m	4	10	TO220F(FM20)	2.0
1.5	2.1	20	1.5	340	26	0	10	2.1	2.8	10	1.5					TO220F(FM20)	2.0
1.2	1.7	20	1	290	30	0	10	3	3.8	10	1					TO220F(FM20)	2.0
1.8	2.8	20	1.5	600	40	0	10	4	5	10	1.5					TO220F(FM20)	2.0
7	11	10	9	850	250	0	10	130m	175m	10	9					TO220F(FM20)	2.0
7	11	10	9	850	250	0	10	0.2	0.25	10	9					TO220F(FM20)	2.0
3.5	5.2	20	2.5	650	110	0	10	1.2	1.5	10	2.5					TO220F(FM20)	2.0
30	80	10	35	8000	1000	0	10	5m	6m	10	35					TO220S(Surface-mount)	1.4
30	80	10	35	8000	1000	0	10	5m	6m	10	35					TO3P(MT100)	6.0
30	50	10	35	5100	860	0	10	5m	6m	10	35					TO220S(Surface-mount)	1.4
30	50	10	35	5100	860	0	10	5m	6m	10	35					TO3P(MT100)	6.0
17		10	25	2000	500	0	10	12m	15m	10	25					TO220	2.0
18	28	10	22	2000	80	0	25	45m	53m	10	22					TO220F(FM20)	2.0
30	42	10	25	3800	210	0	25	37m	43m	10	25					TO3PF(FM100)	6.5
13	21	10	12	2000	70	0	25	68m	75m	10	12					TO220F(FM20)	2.0
8	17	10	10	1600	50	0	25	86m	95m	10	10					TO220F(FM20)	2.0
25	38	10	20	3800	190	0	25	46m	53m	10	20					TO3PF(FM100)	6.5
20	33	10	15	3800	180	0	25	57m	65m	10	15					TO3PF(FM100)	6.5
23	37	10	15	4600	220	0	25	50m	63m	10	15					TO3PF(FM100)	6.5
20		10	25	2800	600	0	10	7m	9m	10	25					TO220S(Surface-mount)	1.5
20		10	25	2700	500	0	10	10m	13m	10	25					TO220F(FM20)	2.0
17		10	25	2000	500	0	10	12m	15m	10	25					TO220F(FM20)	2.0
30		10	37	3200	750	0	10	7m	10m	10	37					TO220F(FM20)	2.0
20		10	25	2500	150	0	10	11m	14m	10	25					TO220S(Surface-mount)	1.5
18	28	10	22	2000	80	0	25	45m	53m	10	22					TO263(Surface-mount)	1.5
8	17	10	10	1600	50	0	25	86m	95m	10	10					TO263(Surface-mount)	1.5

Selection Guide

By V_{CES}

V_{CES} (V)	I_C (A)	P_C (W)	Part Number	Package
330	20	35	FGT312	TO220F(FM20)
330	30	35	FGT313	TO220F(FM20)
400	20	35	FGT412	TO220F(FM20)
600	20	35	FGT612	TO220F(FM20)
600	30	60	FGM603	TO3PF(FM100)
600	50	150	MGD623N	TO3P(MT100)
600	50	150	MGD623S	TO3P(MT100)

Specifications List by Part Number

Part Number	Absolute Maximum Ratings (Ta=25°C)																					
	V_{CES}	V_{GE}	I_C	$I_{D(pulse)}$	P_C (Ta=25°C)	I_{GES}		I_{CES}		$V_{GE(th)}$				$V_{CE(sat)}$				Cies	Coes	Cres		
							Conditions		Conditions			Conditions				Conditions					Conditions	
	(V)	(V)	(A)	(A)	(W)	(nA)	V_{GE}	(μA)	V_{CE}	(V)		I_C	V_{CE}	(V)		I_C	V_{GE}	(pF)	(pF)	(pF)	V_{CE}	V_{GE}
						max	(V)	max	(V)	min	max	(mA)	(V)	typ	max	(A)	(V)	typ	typ	typ	(V)	(V)
FGM603	600	±20	30	90	60	±100	±20	100	600	4	7	1	10	1.6	2.0	30	15	4600	110	80	20	0
FGT312	330	±30	20	120	35	±100	±30	100	330	3	6	1	10	1.3	1.7	20	15	1200	130	65	20	0
FGT313	330	±30	30	200	35	±100	±30	100	330	3	6	1	10	1.3	1.7	30	15	2400	110	60	30	0
FGT412	400	±30	20	120	35	±100	±30	100	400	3	6	1	10	1.4	1.8	20	15	1200	120	65	20	0
FGT612	600	±30	20	120	35	±100	±30	100	600	3	6	1	10	1.6	2.0	20	15	1200	80	40	20	0
MGD623N	600	±30	50	100	150	±100	±30	100	600	3	6	1	10	1.7	2.3	50	15	2500	150	80	20	0
MGD623S	600	±30	50	100	150	±100	±30	100	600	3	6	1	10	1.8	2.4	50	15	2500	150	80	20	0

Electrical Characteristics (Ta=25°C)																								
	td(on)	tr	td(off)	tf				Qg	Qge	Qgc				VF			trr			Package	Mass	
					Conditions						Conditions					Conditions		Conditions				
	(ns)	(ns)	(ns)	(ns)	ID	VCE		(nC)	(nC)	(nC)	IC	VCE	VGE	(V)		IF	(μs)	IF	di/dt		(g)	
	typ	typ	typ	typ	(A)	(V)		typ	typ	typ	(A)	(V)	(V)	typ	max	(A)	typ	(A)	(A/μs)			
	130	70	340	200	30	300	L Load	120	30	30	30	300	15							TO3PF(FM100)	6.5	
	15	30	55	210	20	150	R Load	35	8	10	20	150	15							TO220F(FM20)	2.0	
	20	90	90	180	60	250	R Load	65	10	20	60	250	15							TO220F(FM20)	2.0	
	15	35	55	220	20	200	R Load	35	8	10	20	200	15							TO220F(FM20)	2.0	
	25	60	70	190	20	300	R Load	35	6	9	20	300	15							TO220F(FM20)	2.0	
	75	70	250	200	50	300	L Load	65	15	20	50	300	15	1.2	1.6	30	0.3	30	100	TO3P(MT100)	6.0	Built-in Di
	75	70	250	120	50	300	L Load	65	15	20	50	300	15	1.2	1.6	30	0.3	30	100	TO3P(MT100)	6.0	Built-in Di

Specifications List by Part Number

Part Number	Category	Circuit Count	V_{CEO} · V_{DSS} (V) · V_{CES} (V)	IC · ID (A)	hFE (min)	$R_{DS(ON)}$ max(Ω)	Package	Mass (g)
SDA05	For 3-phase motor driver	3	–60	–4	2000		PS16 (Surface-Mount)	1.1
SDC03	For sink driver	4	60±10	1.5	2000		PS16 (Surface-Mount)	1.1
SDC04	For sink driver	4	100±15	1.5	2000		PS16 (Surface-Mount)	1.1
SDC06	For sink driver	4	30 to 45	2	400		PS16 (Surface-Mount)	1.1
SDC07	For 3-phase motor driver	3	60	4	2000		PS16 (Surface-Mount)	1.1
SDH02	For sink driver	4	100	1.5	2000		PS16 (Surface-Mount)	1.1
SLA4030	For sink driver	4	100	4	2000		SIP12 with Fin (SLA12Pin)	6.0
SLA4031	For sink driver	4	120	4	2000		SIP12 with Fin (SLA12Pin)	6.0
SLA4041	For sink driver	4	200	3	1000		SIP12 with Fin (SLA12Pin)	6.0
SLA4051	For sink driver	9	120	2	2000		SIP21 with Fin (SLA21Pin)	6.0
SLA4052	For sink driver	9	120	3	2000		SIP21 with Fin (SLA21Pin)	6.0
SLA4060	For sink driver	4	120	5	2000		SIP12 with Fin (SLA12Pin)	6.0
SLA4061	For sink driver	4	120	5	2000		SIP12 with Fin (SLA12Pin)	6.0
SLA4070	For source driver	4	–100	–5	1000		SIP12 with Fin (SLA12Pin)	6.0
SLA4071	For source driver	4	–100	–5	2000		SIP12 with Fin (SLA12Pin)	6.0
SLA4390	H bridge	4	±100	±5	2000		SIP12 with Fin (SLA12Pin)	6.0
SLA5022	For 3-phase motor driver	6	±60	±6	2000	0.22	SIP12 with Fin (SLA12Pin)	6.0
SLA5037	For sink driver	4	100	10		0.08	SIP12 with Fin (SLA12Pin)	6.0
SLA5041	For sink driver	4	200	10		0.175	SIP12 with Fin (SLA12Pin)	6.0
SLA5059	For 3-phase motor driver	6	±60	±4		0.55	SIP12 with Fin (SLA12Pin)	6.0
SLA5060	For 3-phase motor driver	6	±60	±6		0.22	SIP12 with Fin (SLA12Pin)	6.0
SLA5061	For 3-phase motor driver	6	±60	±10		0.14	SIP12 with Fin (SLA12Pin)	6.0
SLA5064	For 3-phase motor driver	6	±60	±10		0.14	SIP12 with Fin (SLA12Pin)	6.0
SLA5065	For 5-phase motor driver	4	60	7		0.1	SIP15 with Fin (SLA15Pin)	6.0
SLA5068	For 5-phase motor driver	6	60	7		0.1	SIP15 with Fin (SLA15Pin)	6.0
SLA5073	For 5-phase motor driver	6	60	5		0.3	SIP15 with Fin (SLA15Pin)	6.0
SLA5074	For 5-phase motor driver	4	60	5		0.3	SIP15 with Fin (SLA15Pin)	6.0
SLA5075	For 3-phase motor driver	6	500	±5		1.4	SIP15 with Fin (SLA15Pin)	6.0
SLA5085	For sink driver	5	60	5		0.22	SIP12 with Fin (SLA12Pin)	6.0
SLA5086	For source driver	5	–60	–5		0.22	SIP12 with Fin (SLA12Pin)	6.0
SLA5096	For 3-phase motor driver	6	55	8		0.08	SIP15 with Fin (SLA15Pin)	6.0
SLA5201	For 3-phase motor driver	6	600	7		1.85typ(V_{CE}(sat))	SIP15 with Fin (SLA15Pin)	6.0
SLA5212	For 3-phase motor driver	6	35	±8		0.07	SIP15 with Fin (SLA15Pin)	6.0
SLA5222	For Simplifed PFC	1+Di×4	600	30		1.3typ(V_{CE}(sat))	SIP12 with Fin (SLA12Pin)	6.0
SLA6012	For 3-phase motor driver	6	±60	±4	2000		SIP12 with Fin (SLA12Pin)	6.0
SLA6020	For 3-phase motor driver	6	±100	±5	2000		SIP12 with Fin (SLA12Pin)	6.0
SLA6022	For 3-phase motor driver	6	±80	±5	2000		SIP12 with Fin (SLA12Pin)	6.0
SLA6023	For 3-phase motor driver	6	±60	±6	2000		SIP12 with Fin (SLA12Pin)	6.0
SLA6024	For 3-phase motor driver	6	±60	±8	2000		SIP12 with Fin (SLA12Pin)	6.0
SLA6026	For 3-phase motor driver	6	±60	±10	2000		SIP12 with Fin (SLA12Pin)	6.0
SMA4020	For source driver	4	–60	–4	2000		SIP12 (SMA12Pin)	4.0
SMA4021	For source driver	4	–60	–3	2000		SIP12 (SMA12Pin)	4.0
SMA4030	For sink driver	4	100	3	2000		SIP12 (SMA12Pin)	4.0
SMA4032	For sink driver	4	100	3	2000		SIP12 (SMA12Pin)	4.0
SMA4033	For sink driver	4	100	2	2000		SIP12 (SMA12Pin)	4.0
SMA4036	For sink driver	6	120	2	2000		SIP15 (SMA15Pin)	4.0
SMA5106	For sink driver	4	100	4		0.55	SIP12 (SMA12Pin)	4.0
SMA5112	For 3-phase motor driver	6	250	7		0.5	SIP12 (SMA12Pin)	4.0
SMA5117	For 3-phase motor driver	6	250	7		0.25	SIP12 (SMA12Pin)	4.0
SMA5118	For 3-phase motor driver	6	500	±5		1.4	SIP12 (SMA12Pin)	4.0
SMA5125	For 3-phase motor driver	6	±60	±10		0.14	SIP12 (SMA12Pin)	4.0
SMA5127	For 3-phase motor driver	6	±60	±4		0.55	SIP12 (SMA12Pin)	4.0
SMA5130	For 3-phase motor driver	6	250	2.5	2000	0.9	SIP15 (SMA15Pin)	4.0
SMA5131	For 3-phase motor driver	6	250	2		1.8	SIP12 (SMA12Pin)	4.0
SMA5132	For 3-phase motor driver	6	500	1.5		4	SIP12 (SMA12Pin)	4.0
SMA5133	For 3-phase motor driver	6	500	2.5		2	SIP12 (SMA12Pin)	4.0

Part Number	Category	Circuit Count	V_{CEO} · V_{DSS} (V) · V_{CES} (V)	IC · ID (A)	hFE (min)	$R_{DS\ (ON)}$ max(Ω)	Package	Mass (g)
SMA6010	For 3-phase motor driver	6	±60	±4	2000		SIP12 (SMA12Pin)	4.0
SMA6080	For 3-phase motor driver	6	±60	±2	2000		SIP12 (SMA12Pin)	4.0
SMA6511	For driving stepping motor with two supplies	5	100±15/–60	1.5/–3	2000		SIP12 (SMA12Pin)	4.0
STA301A	For sink driver	3	60±10	4	1000		SIP8 (STA8Pin)	2.0
STA302A	For source driver/3-phase motor driver	3	–50	–4	1000		SIP8 (STA8Pin)	2.0
STA303A	For sink driver/3-phase motor driver	3	100	4	1000		SIP8 (STA8Pin)	2.0
STA322A	For source driver	3	–50	–3	100		SIP8 (STA8Pin)	2.0
STA401A	For sink driver	4	60±10	4	1000		SIP10 (STA10Pin)	2.6
STA402A	For source driver	4	–50	–4	1000		SIP10 (STA10Pin)	2.6
STA403A	For sink driver	4	100	4	1000		SIP10 (STA10Pin)	2.6
STA404A	For sink driver	4	200	3	1000		SIP10 (STA10Pin)	2.6
STA406A	For sink driver	4	60±10	6	2000		SIP10 (STA10Pin)	2.6
STA408A	For source driver	4	–120	–4	2000		SIP10 (STA10Pin)	2.6
STA412A	For sink driver	4	60	3	300		SIP10 (STA10Pin)	2.6
STA413A	For sink driver	4	35±5	3	500		SIP10 (STA10Pin)	2.6
STA421A	For source driver	4	–60	–3	40		SIP10 (STA10Pin)	2.6
STA431A	H bridge	4	±60	±3	40		SIP10 (STA10Pin)	2.6
STA434A	H bridge	4	±60	±4	1000		SIP10 (STA10Pin)	2.6
STA457C	H bridge	4	±60	±4	2000		SIP10 (STA10Pin)	2.6
STA460C	For sink driver	2	60±10	6	700		SIP10 (STA10Pin)	2.6
STA471A	For sink driver	4	60±10	2	2000		SIP10 (STA10Pin)	2.6
STA472A	For source driver	4	–60	–2	2000		SIP10 (STA10Pin)	2.6
STA473A	For sink driver	4	100	2	2000		SIP10 (STA10Pin)	2.6
STA475A	For sink driver	4	100±15	2	2000		SIP10 (STA10Pin)	2.6
STA481A	For sink driver	4	60±10	1	2000		SIP10 (STA10Pin)	2.6
STA485A	For sink driver	4	100±15	1	2000		SIP10 (STA10Pin)	2.6
STA491A	H bridge	4	±20	±7	80		SIP10 (STA10Pin)	2.6

Specifications List by Application Sink Driver Arrays

●Built-in Avalanche Diodes, between Collector and Base

Part Number	Circuit Count	V_{CEO} (V)/ V_{DSS} (V)	I_C (A)/ I_D (A)	h_{FE} (min)	$R_{DS(ON)}$max (Ω)	Equivalent Circuit	Package
STA460C	2	60±10	6	700		1	SIP10 (STA10Pin)
STA301A	3	60±10	4	1000		2	SIP8 (STA8Pin)
SDC06	4	30 to 45	2	400		3	PS16 (Surface-Mount)
STA413A	4	35±5	3	500		4	SIP10 (STA10Pin)
STA481A	4	60±10	1	2000		5	SIP10 (STA10Pin)
SDC03	4	60±10	1.5	2000		6	PS16 (Surface-Mount)
STA471A	4	60±10	2	2000		5	SIP10 (STA10Pin)
STA401A	4	60±10	4	1000		5	SIP10 (STA10Pin)
STA406A	4	60±10	6	2000		5	SIP10 (STA10Pin)
STA485A	4	100±15	1	2000		5	SIP10 (STA10Pin)
SDC04	4	100±15	1.5	2000		6	PS16 (Surface-Mount)
STA475A	4	100±15	2	2000		5	SIP10 (STA10Pin)

●Built-in Flywheel Diodes

Part Number	Circuit Count	V_{CEO} (V)/ V_{DSS} (V)	I_C (A)/ I_D (A)	h_{FE} (min)	$R_{DS(ON)}$max (Ω)	Equivalent Circuit	Package
SDH02	4	100	1.5	2000		8	PS16 (Surface-Mount)
SMA4033	4	100	2	2000		9	SIP12 (SMA12Pin)
SMA4032	4	100	3	2000		9	SIP12 (SMA12Pin)
SMA5106	4	100	4		0.55	7	SIP12 (SMA12Pin)
SLA4031	4	120	4	2000		9	SIP12 with Fin (SLA12Pin)
SLA4061	4	120	5	2000		9	SIP12 with Fin (SLA12Pin)
SLA4041	4	200	3	1000		9	SIP12 with Fin (SLA12Pin)
SMA4036	6	120	2	2000		10	SIP15 (SMA15Pin)
SLA4051	9	120	2	2000		11	SIP12 with Fin (SLA12Pin)
SLA4052	9	120	3	2000		11	SIP12 with Fin (SLA12Pin)

●General-Purpose

Part Number	Circuit Count	V_{CEO} (V)/ V_{DSS} (V)	I_C (A)/ I_D (A)	h_{FE} (min)	$R_{DS(ON)}$max (Ω)	Equivalent Circuit	Package
STA303A	3	100	4	100		12	SIP8Pin
STA412A	4	60	3	300		13	SIP10Pin
STA473A	4	100	2	2000		17	SIP10Pin
SMA4030	4	100	3	2000		15	SIP12Pin
STA403A	4	100	4	1000		17	SIP10Pin
SLA4030	4	100	4	2000		15	SIP12 with Fin (SLA12Pin)
SLA5037	4	100	10		0.08	14	SIP12 with Fin (SLA12Pin)
SLA4060	4	120	5	2000		15	SIP12 with Fin (SLA12Pin)
STA404A	4	200	3	1000		17	SIP10Pin
SLA5041	4	200	10		0.175	14	SIP12 with Fin (SLA12Pin)
SLA5085	5	60	5		0.22	16	SIP12 with Fin (SLA12Pin)

●Equivalent Circuit (for Sink Driver)

①

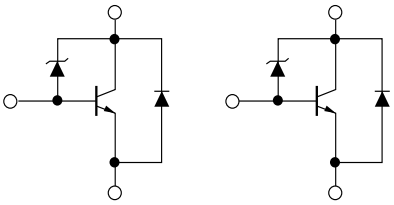

②

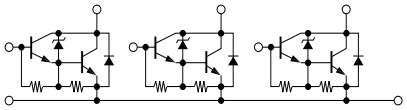

③

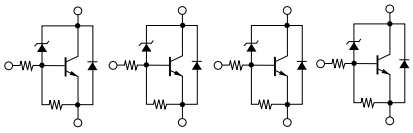

④

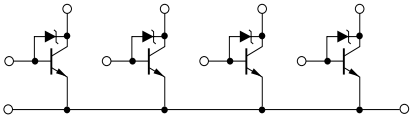

⑤

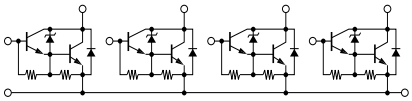

⑥

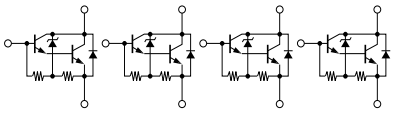

⑦

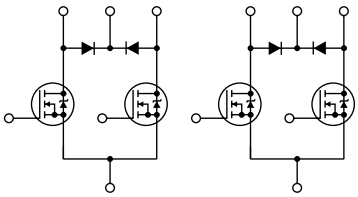

⑧

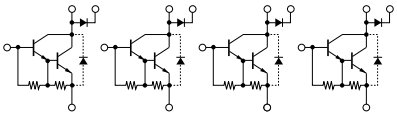

⑨

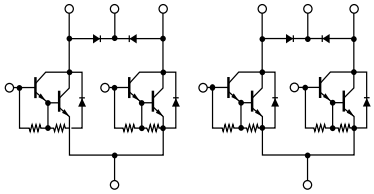

⑩

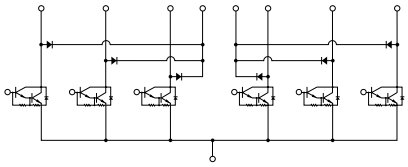

⑪

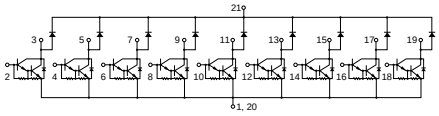

⑫

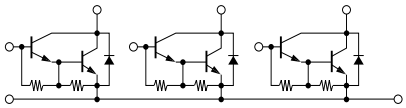

⑬

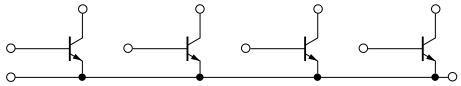

⑭

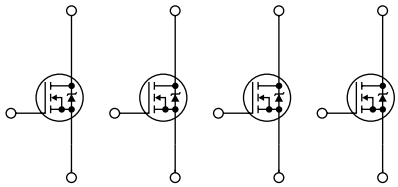

⑮

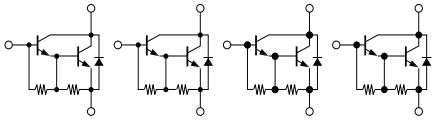

⑯

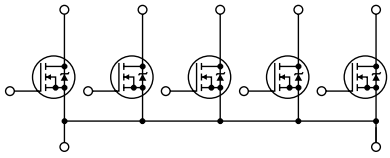

⑰

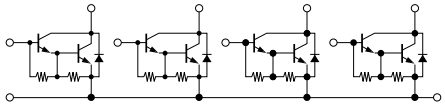

Specifications List by Application Source Driver Arrays

●Built-in Flywheel Diodes

Part Number	Circuit Count	V_{CEO} (V)/ V_{DSS} (V)	I_C (A)/ I_D (A)	h_{FE} (min)	$R_{DS(ON)}$max (Ω)	Equivalent Circuit	Package
SMA4021	4	–60	–3	2000		1	SIP12 (SMA12Pin)
SLA4071	4	–100	–5	2000		1	SIP12 with Fin (SLA12Pin)

●General-Purpose

Part Number	Circuit Count	V_{CEO} (V)/ V_{DSS} (V)	I_C (A)/ I_D (A)	h_{FE} (min)	$R_{DS(ON)}$max (Ω)	Equivalent Circuit	Package
STA322A	3	–50	–3	100		2	SIP8 (STA8Pin)
STA302A	3	–50	–4	1000		3	SIP8 (STA8Pin)
STA402A	4	–50	–4	1000		4	SIP10 (STA10Pin)
STA472A	4	–60	–2	2000		4	SIP10 (STA10Pin)
STA421A	4	–60	–3	40		6	SIP10 (STA10Pin)
SMA4020	4	–60	–4	2000		5	SIP12 (SMA12Pin)
SLA4070	4	–100	–5	1000		5	SIP12 with Fin (SLA12Pin)
STA408A	4	–120	–4	2000		7	SIP10 (STA10Pin)
SLA5086	5	–60	–5		0.22	8	SIP12 with Fin (SLA12Pin)

●**Equivalent Circuit (for Source Driver)**

①

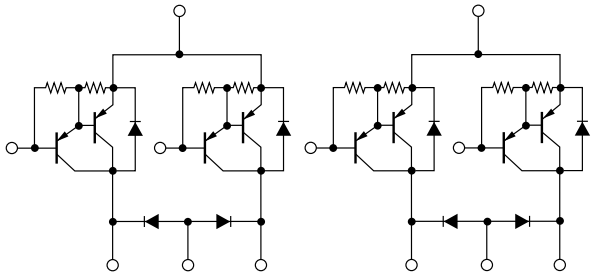

②

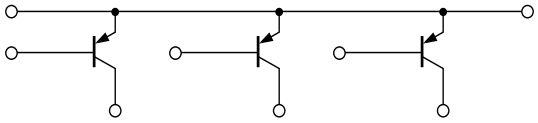

③

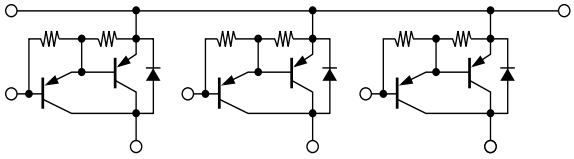

④

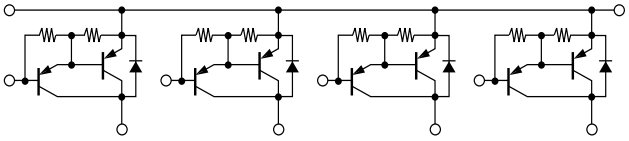

⑤

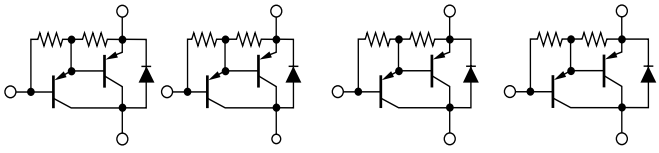

⑥

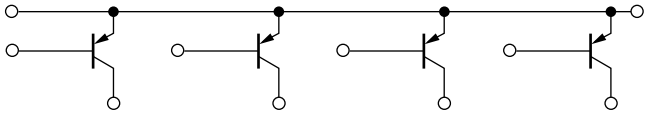

⑦

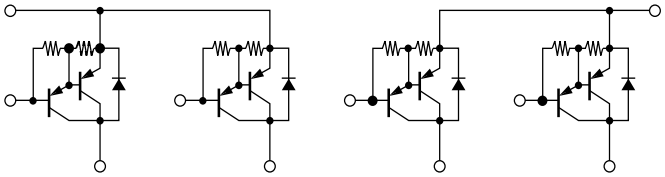

⑧

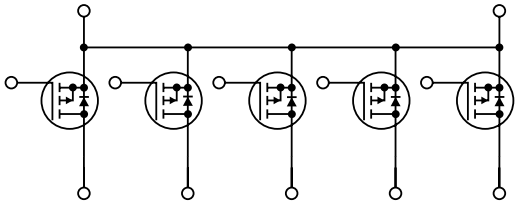

Specifications List by Application Motor Driver Arrays

●H Bridge

Part Number	Circuit Count	V_{CEO} (V)/ V_{DSS} (V)	I_C (A)/ I_D (A)	h_{FE} (min)	$R_{DS(ON)}$max (Ω)	Equivalent Circuit	Package
STA431A	4	±60	±3	40		1	SIP10 (STA10Pin)
STA434A	4	±60	±4	1000		2	SIP10 (STA10Pin)
STA457C	4	±60	±4	2000		3	SIP10 (STA10Pin)
SLA4390	4	±100	±5	2000		2	SIP12 with Fin (SLA12Pin)
STA491A	4	±20	±7	45		4	SIP10 (STA10Pin)

●Equivalent Circuit (for Motor Driver)

①

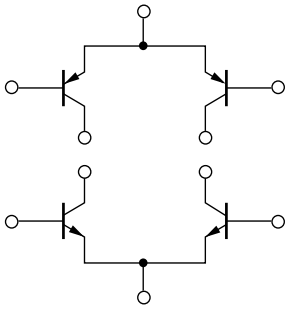

②

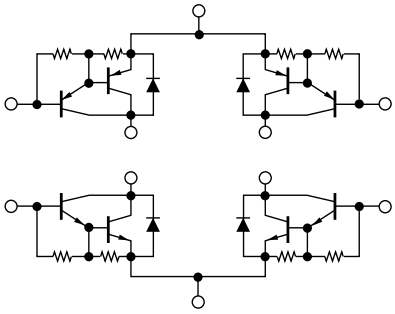

③

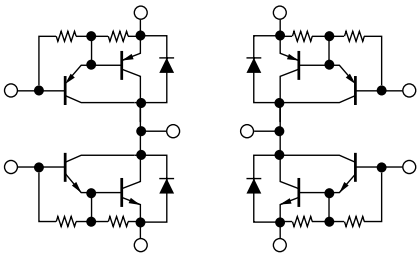

④

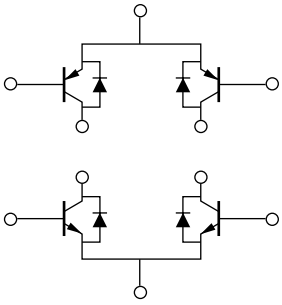

●For 3-Phase Motor Drivers

Part Number	Circuit Count	V_{CEO} (V)/ V_{DSS} (V)/ V_{CES} (V)	I_C (A)/ I_D (A)	h_{FE} (min)	$R_{DS(ON)}$max (Ω)	Equivalent Circuit	Package
SDC07	3	60	4	2000		6	PS16 (Surface-Mount)
STA303A	3	100	4	1000		7	SIP8 (STA8Pin)
STA302A	3	–50	–4	1000		8	SIP8 (STA8Pin)
SDA05	3	–60	–4	2000		9	PS16 (Surface-Mount)
SLA5212	6	35	±8		70m	18	SIP15 with Fin (SLA15Pin)
SLA5096	6	55	±8		80m	18	SIP15 with Fin (SLA15Pin)
SLA5059	6	60	±4		0.55	10	SIP15 with Fin (SLA15Pin)
SLA5060	6	60	±6		0.22	10	SIP12 with Fin (SLA12Pin)
SLA5061	6	60	±10		0.14	10	SIP12 with Fin (SLA12Pin)
SLA5064	6	60	±10		0.14	11	SIP12 with Fin (SLA12Pin)
SMA6080	6	±60	±2	2000		13	SIP12 (SMA12Pin)
SMA6010	6	±60	±4	2000		13	SIP12 (SMA12Pin)
SLA6012	6	±60	±4	2000		12	SIP12 with Fin (SLA12Pin)
SMA5127	6	±60	±4		0.55	14	SIP12 (SMA12Pin)
SLA5022	6	±60	±6	2000	0.22	15	SIP12 with Fin (SLA12Pin)
SLA6023	6	±60	±6	2000		12	SIP12 with Fin (SLA12Pin)
SLA6024	6	±60	±8	2000		12	SIP12 with Fin (SLA12Pin)
SLA6026	6	±60	±10	2000		12	SIP12 with Fin (SLA12Pin)
SMA5125	6	±60	±10		0.14	11	SIP12 (SMA12Pin)
SLA6022	6	±80	±5	2000		12	SIP12 with Fin (SLA12Pin)
SLA6020	6	±100	±5	2000		13	SIP12 with Fin (SLA12Pin)
SMA5130	6	±250	±2.5	2000	0.9	20	SIP15 (SMA15Pin)
SMA5131	6	250	2		1.8	17	SIP12 (SMA12Pin)
SMA5112	6	250	7		0.5	17	SIP12 (SMA12Pin)
SMA5117	6	250	7		0.25	17	SIP12 (SMA12Pin)
SMA5132	6	500	1.5		4	17	SIP12 (SMA12Pin)
SMA5133	6	500	2.5		2	17	SIP12 (SMA12Pin)
SLA5075	6	500	±5		1.4	16	SIP15 with Fin (SLA15Pin)
SMA5118	6	500	±5		1.4	17	SIP12 (SMA12Pin)
SLA5201	6	600	7			19	SIP15 with Fin (SLA15Pin)

●For Driving Stepping Motor with Two Supplies

Part Number	Circuit Count	V_{CEO} (V)/ V_{DSS} (V)	I_C (A)/ I_D (A)	h_{FE} (min)	$R_{DS(ON)}$max (Ω)	Equivalent Circuit	Package
SMA6511	5	100±15/–60	1.5/–3	2000		27	SIP12 (SMA12Pin)

●For 5-Phase Motor Drive

Part Number	Circuit Count	V_{CEO} (V)/ V_{DSS} (V)	I_C (A)/ I_D (A)	h_{FE} (min)	$R_{DS(ON)}$max (Ω)	Equivalent Circuit	Package
SLA5074	4	60	5		0.3	22	SIP15 with Fin (SLA15Pin)
SLA5065	4	60	7		0.1	22	SIP15 with Fin (SLA15Pin)
SLA5073	6	60	5		0.3	18	SIP15 with Fin (SLA15Pin)
SLA5068	6	60	7		0.1	16	SIP15 with Fin (SLA15Pin)

●Equivalent Circuit (for Motor Driver)

⑥

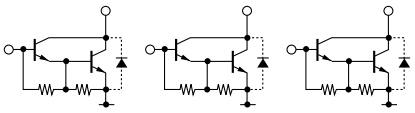

⑦

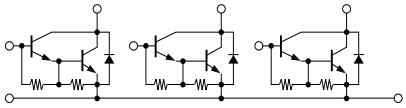

⑧

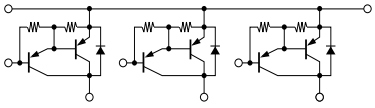

⑨

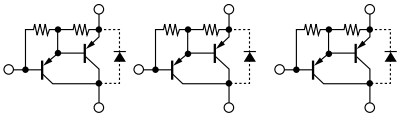

⑩

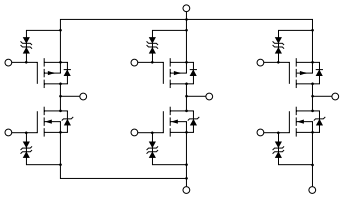

⑪

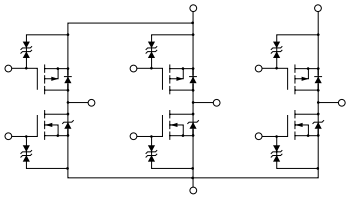

⑫

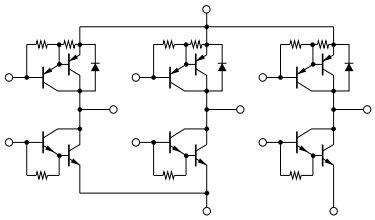

⑬

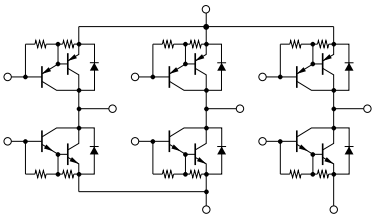

⑭

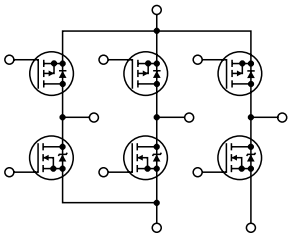

⑮

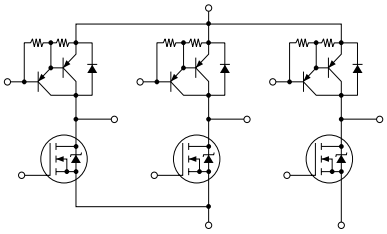

⑯

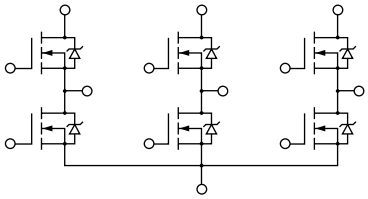

⑰

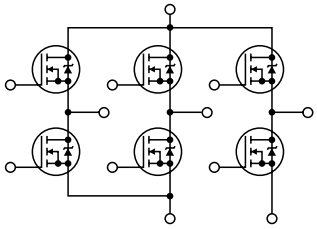

⑱

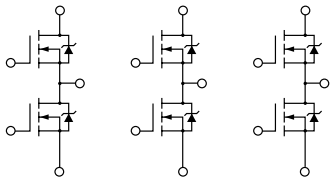

⑲

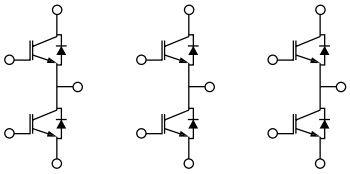

⑳

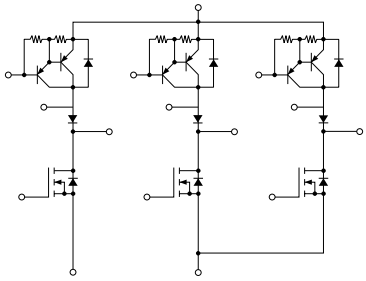

㉑

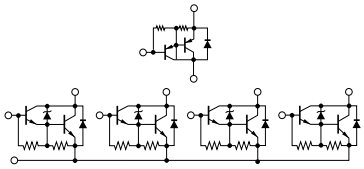

㉒

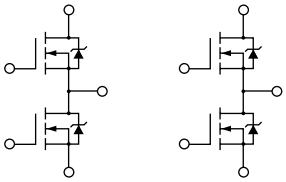

Specifications List by Application

Applications	Typical Connection Diagram	Part Number		
		Transistors		MOS FETs
		Darlington	Single	
●Solenoid ●Relay	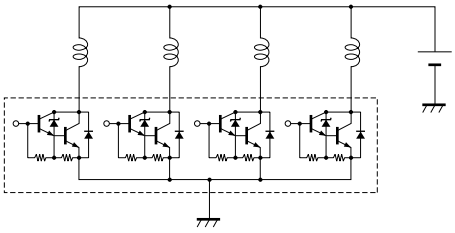	STA301A STA401A STA406A STA471A STA475A STA481A STA485A SDC04 SDC03	STA460C STA413A SDC06	
	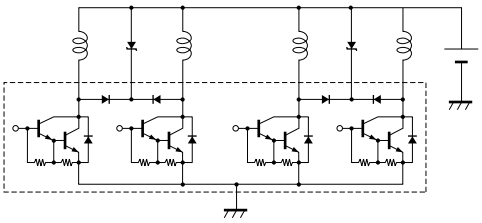	SLA4031 SLA4041 SLA4060 SMA4032 SMA4033 SMA4036 SDH02		SMA5106
	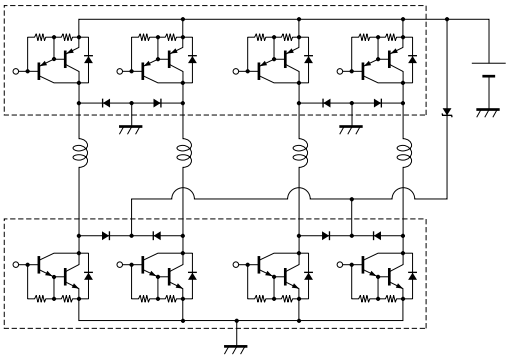	SLA4071 SMA4021		
	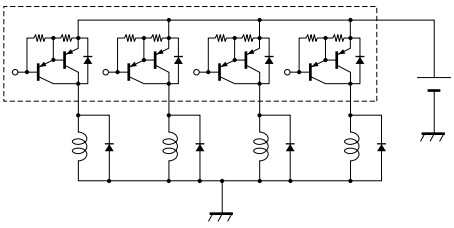	STA302A STA402A STA408A STA472A SLA4070 SMA4020	STA322A STA421A	

Applications		Typical Connection Diagram	Part Number		
			Transistors		MOS FETs
			Darlington	Single	
●DC Motor	Normal/Reverse Rotation Control	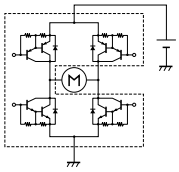	STA434A STA457C STA4390	STA431A STA474A	
●3-Phase DC Brushless Motor	AC100V Direct Driver	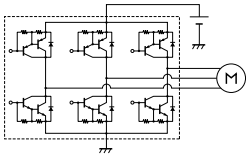	STA302A+STA303A SMA6010 SLA6020 SDA05+SDC07 SMA6080		
	AC200V Direct Driver	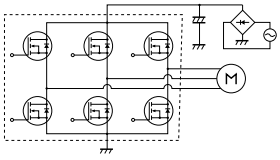			SLA5075 SMA5112 SMA5117 SMA5118 SMA5131 SMA5132 SMA5133
	PWM Control	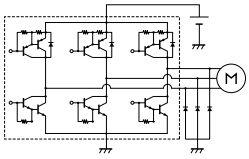	SLA6012 SLA6022 SLA6023 SLA6024 SLA6026		
		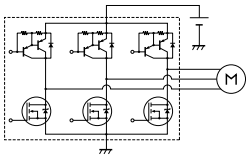	SLA5022 SMA5130		
		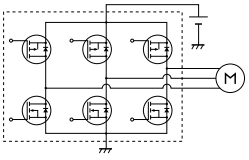			SLA5059 SLA5060 SLA5061 SLA5064 SMA5125 SMA5127

Applications		Typical Connection Diagram	Part Number		
			Transistors		MOS FETs
			Darlington	Single	
●Stepping Motor	Constant Voltage Driver	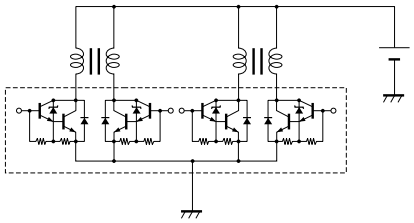	STA401A STA406A STA435A STA471A STA475A STA481A STA485A SLA4010 SDC04 SDC03	STA460C STA413A SDC06	
	Two Supplies Driver	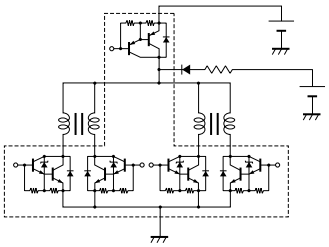	SMA6511		
	Bipolar Driver	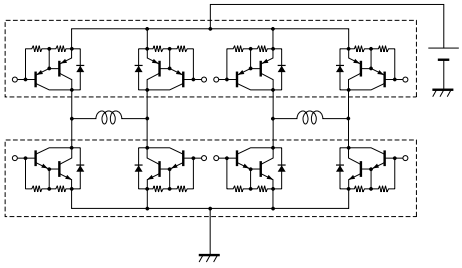	STA473A STA472A STA408A STA404A STA403A STA402A SMA4030 SMA4020 SLA4070 SLA4060 SLA4030	STA421A STA412A SDC01	

Applications	Typical Connection Diagram	Part Number	
		N-CH	P-CH
●5-Phase Motor	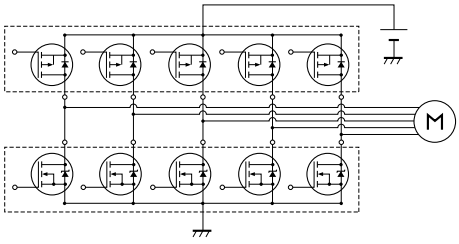	SLA5065+SLA5068 SLA5073+SLA5074 SLA5085	SLA5086

■Package Type (Dimensions)

• TO-220F (FM20)

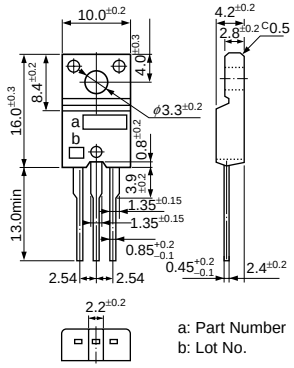

• TO-220 (MT-25)

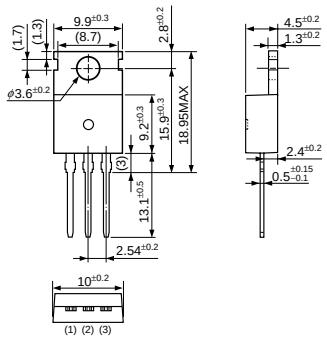

• TO-3P (MT-100)

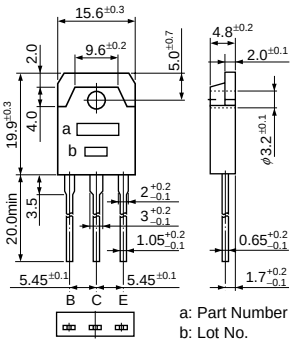

• TO-3PF (FM100)

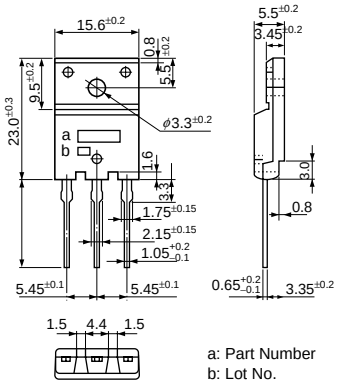

• MT-200

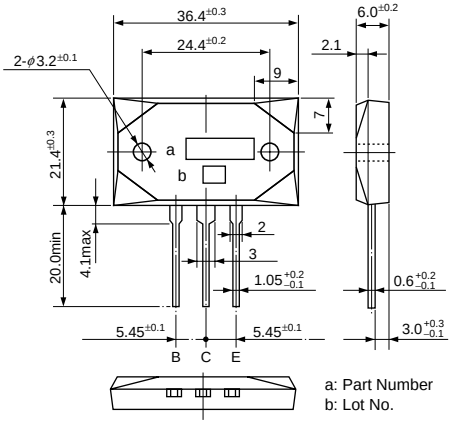

• TO-220S

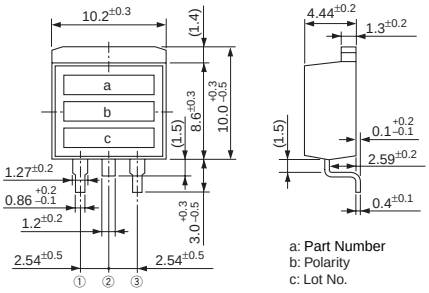

• TO-263

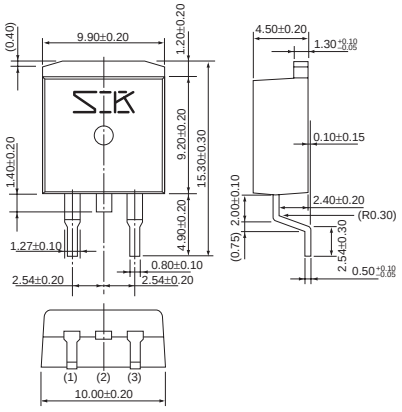

• TO3P-5Pin

NPN

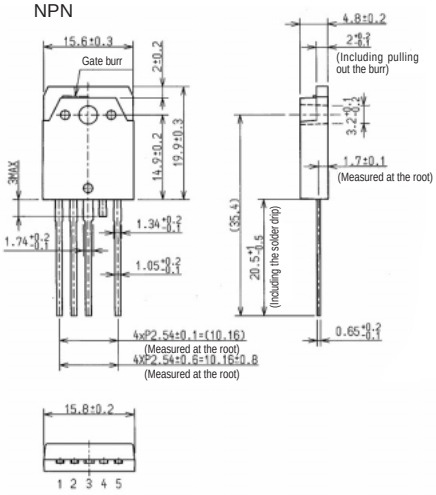

PNP

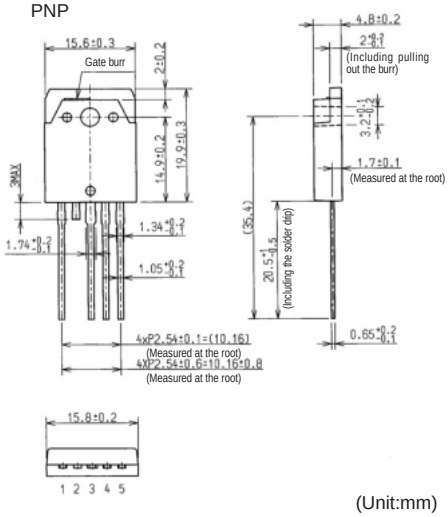

(Unit:mm)

• SIP 8 (STA8Pin)

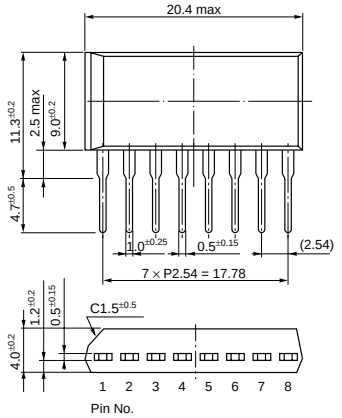

• SIP 10 (STA10Pin)

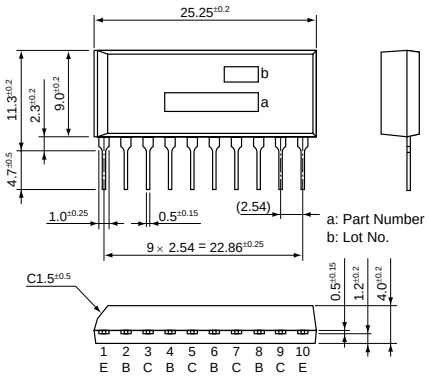

• PS 16 (Surface-Mount)

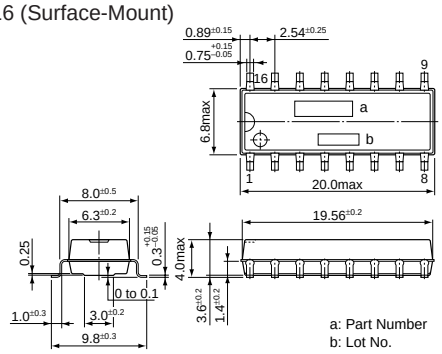

• SIP 12 (SMA12Pin)

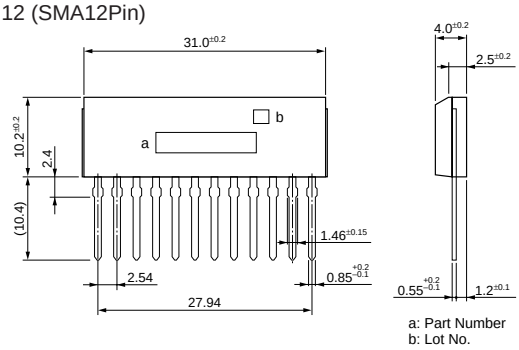

• SIP 15 (SMA15Pin)

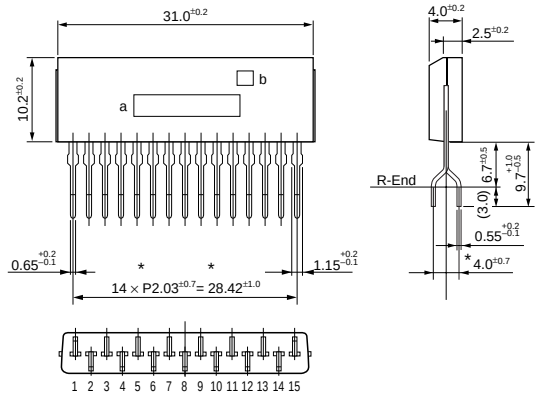

• SIP 12 with Fin (SLA12Pin)

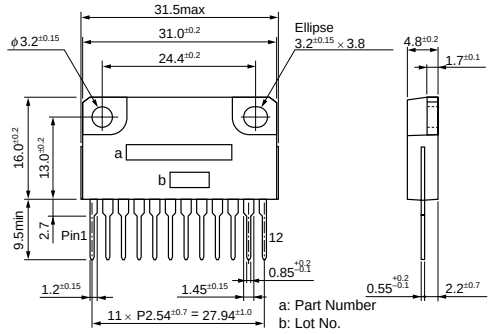

• SIP 15 with Fin (SLA15Pin)

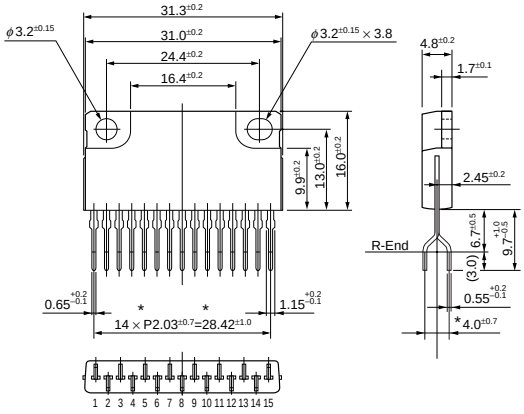

• SIP 21 with Fin (SLA21Pin)

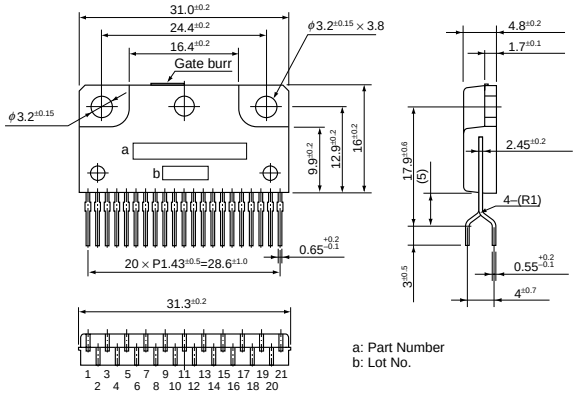

(Unit:mm)

3

Thyristors

Ordering Information

All products listed must be ordered in standard packing increments.

Product Name	Package	Standard Packing Quantities (Bulk)
SLA0201	SLA12Pin	1080(Stick)
STA203A	STA8Pin	1000(Box)/4050(Stick)
TFC563D	TO220S(Straight)	600(Stick)
TF361H-A	TO220F	4000(Stick)
TF541S-A	FM20	1000(Box)/3750(Stick)
TF561S-A	FM20	1000(Box)/3750(Stick)
TFA37S	FM20	1000(Box)/3750(Stick)
TFA38S	FM20	1000(Box)/3750(Stick)
TFA57S	FM20	1000(Box)/3750(Stick)
TFA58S	FM20	1000(Box)/3750(Stick)
TFA87S	FM20	1000(Box)/3750(Stick)
TFA88S	FM20	1000(Box)/3750(Stick)
TFA107S	FM20	1000(Box)/3750(Stick)
TFA108S	FM20	1000(Box)/3750(Stick)
TMA104S-L	FM20	1000(Box)/3750(Stick)
TMA106G-L	TO220	4000(Stick)
TMA106H-L	TO220F	4000(Stick)
TMA106S-L	FM20	1000(Box)/3750(Stick)
TMA124S-L	FM20	1000(Box)/3750(Stick)
TMA126G-L	TO220	4000(Stick)
TMA126H-L	TO220F	4000(Stick)
TMA126S-L	FM20	1000(Box)/3750(Stick)
TMA164B-L	FM100	500(Box)/1080(Stick)
TMA164P-L	MT100	500(Box)/1080(Stick)
TMA164S-L	FM20	1000(Box)/3750(Stick)
TMA166B-L	FM100	500(Box)/1080(Stick)
TMA166G-L	TO220	4000(Stick)
TMA166H-L	TO220F	4000(Stick)
TMA166P-L	MT100	500(Box)/1080(Stick)
TMA166S-L	FM20	1000(Box)/3750(Stick)
TMA204S-L	FM20	1000(Box)/3750(Stick)
TMA206S-L	FM20	1000(Box)/3750(Stick)
TMA254B-L	FM100	500(Box)/1080(Stick)
TMA256B-L	FM100	500(Box)/1080(Stick)
TMA34S-L	FM20	1000(Box)/3750(Stick)
TMA36G-L	TO220	4000(Stick)
TMA36H-L	TO220F	4000(Stick)
TMA36S-L	FM20	1000(Box)/3750(Stick)
TMA54S-L	FM20	1000(Box)/3750(Stick)
TMA56G-L	TO220	4000(Stick)
TMA56H-L	TO220F	4000(Stick)
TMA56S-L	FM20	1000(Box)/3750(Stick)
TMA84S-L	FM20	1000(Box)/3750(Stick)
TMA86G-L	TO220	4000(Stick)
TMA86H-L	TO220F	4000(Stick)
TMA86S-L	FM20	1000(Box)/3750(Stick)
TMB166S-L	FM20	1000(Box)/3750(Stick)
TMB206S-L	FM20	1000(Box)/3750(Stick)

Application Note

Since reliability can be affected adversely by improper storage environment or handling methods during Characteristic tests, please observe the following cautions.

■ Cautions for Storage

- Ensure that storage conditions comply with the normal temperature (5 to 35°C) and the normal relative humidity (around 40 to 75%), and avoid storage locations that experience high temperature and humidity, or extreme changes in temperature or humidity.
- Avoid locations where dust or harmful gases are present, and avoid direct sunlight.
- Reinspect the devices for rust in leads and solderability after stored for a long time.

■ Cautions for Characteristic Tests and Handling

On characteristics test at incoming inspection, etc, take good care to avoid the surge voltages from the test equipment, the short circuit at terminals, or the wrong connection.

■ Silicone Grease

When using a heatsink, please coat thinly and evenly the back surface of the device and both surfaces of the insulating plate with silicone grease to lower the thermal resistance between the device and the heatsink.
Please select proper silicone grease carefully since the oil in some grease products may penetrate the device and result in an extremely short device life.
Recommended Silicone Grease
• G-746 (Shin-Etsu Chemical)
• YG6260 (Momentive Performance Materials Inc.)
• SC102 (Dow Corning Toray Silicone)

■ Mounting Torque

When mounting torque is insufficient, thermal resistance increases, and so heat radiation effect is decreased. When the torque is excessive, the screw may be broken, the heatsink may be deformed, and the device frame may be distorted, resulting in the device damage. Recommended mounting torque per package is as follows:

● Mounting Torque Table

Package	Screw Torque
MT-25 (TO-220)	0.490 to 0.686 N•m (5 to 7kgf•cm)
FM20 (TO-220F)	
MT-100 (TO-3P)	0.686 to 0.882 N•m (7 to 9kgf•cm)
FM100 (TO-3PF)	
SLA (SIP with Fin)	0.588 to 0.784 N•m (6 to 8kgf•cm)

* When the surface of a heatsink where Full Mold package is to be mounted is not flat due to the burred metal bracket for screwing around the mounting hole of the heatsink, the resin of the package might be cracked even if the torque is lower than the recommended value.
* When a screw is fastened with an air driver for the Full Mold package, a large impact is generated at the time of stop, and the resin may crack even if the torque is lower than the recommended value. An electric driver, therefore, should be used instead of an air driver.

■ Heatsink

A larger contact area between the device and the heatsink is required for more effective heat radiation. To ensure a larger contact area, minimize mounting holes. And select a heatsink with a surface smooth enough and free from burrs and slivers.

■ Soldering Temperature

In general, the device mounted on a printed circuit board is subjected to high temperatures from flow solder in a solder bath, or, from a soldering iron at hand soldering.
The testing method and test conditions (JIS-C-7021 standards) for a device's heat resistance to soldering are:
At a distance of 1.5mm from the device's main body, apply 260°C for 10 seconds, and 350°C for 3 seconds.
Please observe these limits and finish soldering in as short a time as possible.
Since reliability can be affected adversely by improper storage environment or handling methods during Characteristic tests, please observe the following cautions.

Thyristors

Part Number	Absolute Maximum Ratings													
	V_{RSM} V_{DSM} (V)	V_{RRM} V_{DRM} (V)	$I_{T(AV)}$ (A)	Conditions Tc (°C)	$I_{T(RMS)}$ (50Hz) (A)	I_{TSM} 50Hz Single Half Sine Wave, Default T_j=125°C (A)	P_{GM} (W)	$P_{G(AV)}$ (W)	V_{RGM} (V)	I_{FGM} (A)	T_j (°C)	T_{stg} (°C)	I_{RRM} I_{DRM} (mA) max	Conditions T_j (°C)
TF541S-A	500	400	5.0	88	7.8	80	5.0	0.5	5.0	2.0	–40 to +125		2.0	125
SLA0201	650	600	5 × 4		7.8	80	5.0	0.5	5.0	2.0	–40 to +125		2.0	125
TF361H-A	700	600	3.0	83	4.7	*1 60	5.0	0.5	5.0	2.0	−40~+110	−40~+125	2.0	125
TF561S-A	700	600	5.0	88	7.8	80	5.0	0.5	5.0	2.0	–40 to +125		2.0	125
TFA37S	–	700	3.0	127	4.7	60	5.0	0.5	5.0	2.0	–40 to +150		2.0	150
TFA57S	–	700	5.0	115	7.8	80	5.0	0.5	5.0	2.0	–40 to +150		2.0	150
TFA87S	–	700	8.0	98	12.6	120	5.0	0.5	5.0	2.0	–40 to +150		2.0	150
TFA107S	–	700	10	86	15.7	160	5.0	0.5	5.0	2.0	–40 to +150		2.0	150
TFA38S	–	800	3.0	50	4.7	60	5.0	0.5	5.0	2.0	–40 to +150		2.0	150
TFA58S	–	800	5.0	50	7.8	80	5.0	0.5	5.0	2.0	–40 to +150		2.0	150
TFA88S	–	800	8.0	50	12.6	120	5.0	0.5	5.0	2.0	–40 to +150		2.0	150
TFA108S	–	800	10	50	15.7	160	5.0	0.5	5.0	2.0	–40 to +150		2.0	150

*1:Default Tj=110°C

3-Pin Reverse Conducting Thyristors for HID Lamp Ignition

Part Number	Absolute Maximum Ratings														
	V_{DRM} (V)	I_{TRM}*1 (A)	di/dt*1 (A/μs)	P_{GM} (W)	$P_{G(AV)}$ (W)	V_{RGM} (V)	I_{FGM}*2 (A)	I_{FRM} (A)	T_j (°C)	T_{stg} (°C)	I_{DRM} (mA) max	Conditions T_j (°C)	V_{TM} (V) max	Conditions Tc (°C)	Conditions I_{TM} (A)
TFC563D	600	500	1500	5.0	0.5	5.0	2.0	450	–40 to +125		1.0	125	1.4	25	10

*1: T_C≤100°C, V_D≤430V, W_p≤1.0μs, I_G≥70mA, dig/dt≥0.5A/μs, 100kcycles*1
*2: T_C≤100°C, V_D≤430V, W_p≤1.0μs, 100kcycles*1

Electrical Characteristics																		Package	Mass
	V_{TM}	Conditions		V_{GT}		I_{GT}		Conditions	V_{GD}		Conditions	dv/dt	Conditions		I_H	R_{th}			
	(V) max	T_c (°C)	I_{TM} (A)	(V) typ	(V) max	(mA) typ	(mA) max	Tc (°C)	(V) min	T_j (°C)	V_D (V)	(V/μs) typ	T_j (°C)	V_D (V)	(mA) typ	(°C/W) max			g
	1.4	25	10		1.5	0.03	0.2	25	0.1	125	1/2V_{DRM}	20	125	1/2V_{DRM}	4.0	4.0	FM20	2.0
	1.4	25	10	0.7	1.5	5.0	10	25	0.1	125	1/2V_{DRM}	50	125	1/2V_{DRM}	4.0		SIP12 with Fin (SLA12Pin)	6.0
	1.4	25	5.0		1.5	—	0.1	25	0.1	125	1/2V_{DRM}	50	110	1/2V_{DRM}	—	5	TO220F	2.0
	1.4	25	10		1.5	0.03	0.2	25	0.1	125	1/2V_{DRM}	20	125	1/2V_{DRM}	4.0	4.0	FM20	2.0
	1.5	25	10	—	1.0	7.0	15	25	0.2	125	1/2V_{DRM}	300	125	1/2V_{DRM}	15	4.1	FM20	2.0
	1.5	25	15	—	1.0	7.0	15	25	0.2	125	1/2V_{DRM}	300	125	1/2V_{DRM}	15	3.8	FM20	2.0
	1.4	25	20	—	1.0	7.0	15	25	0.2	125	1/2V_{DRM}	300	125	1/2V_{DRM}	20	3.5	FM20	2.0
	1.35	25	20	—	1.0	7.0	15	25	0.2	125	1/2V_{DRM}	300	125	1/2V_{DRM}	20	3.4	FM20	2.0
	1.5	25	10	—	1.0	—	15	25	0.2	125	1/2V_{DRM}	300	125	1/2V_{DRM}	15	4.1	FM20	2.0
	1.5	25	15	—	1.0	—	15	25	0.2	125	1/2V_{DRM}	300	125	1/2V_{DRM}	15	3.8	FM20	2.0
	1.5	25	20	—	1.0	—	15	25	0.2	125	1/2V_{DRM}	300	125	1/2V_{DRM}	20	3.5	FM20	2.0
	1.35	25	20	—	1.0	—	15	25	0.2	125	1/2V_{DRM}	300	125	1/2V_{DRM}	20	3.4	FM20	2.0

Electrical Characteristics														Package	Mass
	V_{GT}		I_{GT}		Conditions	V_{GD}	Conditions		I_H	Rth	V_F	Conditions			
	(V) typ	(V) max	(mA) typ	(mA) max	Tc (°C)	(V) min	T_j (°C)	V_D (V)	(mA) typ	(°C/W) max	(V) max	IF (A)			(g)
		1.5		30	25	0.1	125	480	12	4.0	1.4	10	TO-220S		1.5

Triacs

Part Number	Absolute Maximum Ratings															
	V_{DRM} (V)	$I_{T\ (RMS)}$ (A)	Conditions T_c (°C)	I_{TSM} (A)	Conditions	P_{GM} (W)	$P_{G\ (AV)}$ (W)	I_{GM} (A)	T_j (°C)	T_{stg} (°C)	I_{DRM1} (mA) max	Conditions	I_{DRM2} (mA) max	Conditions	V_{TM} (V) max	Conditions I_{TM} (A)
TMA34S-L	400	3	109	30	125	3	0.3	0.5	–40 to +125		0.1		2		1.5	4.5
TMA54S-L	400	5	102	50	125	5	0.5	2	–40 to +125		0.1		2		1.5	7
TMA84S-L	400	8	92	80	125	5	0.5	2	–40 to +125		0.1		2		1.5	12
TMA104S-L	400	10	85	100	125	5	0.5	2	–40 to +125		0.1		2		1.5	14
TMA124S-L	400	12	77	120	125	5	0.5	2	–40 to +125		0.1		2		1.5	17
TMA164S-L	400	16	66	160	125	5	0.5	2	–40 to +125		0.1		2		1.45	20
TMA164P-L	400	16	108	160	125	5	0.5	2	–40 to +125		0.1		2		1.4	20
TMA164B-L	400	16	98	160	125	5	0.5	2	–40 to +125		0.1		2		1.4	20
TMA204S-L	400	20	53	190	125	5	0.5	2	–40 to +125		0.1		2		1.4	20
TMA254B-L	400	25	83	250	125	5	0.5	2	–40 to +125		0.1		2		1.3	20
STA203A	400	1.2×3	97	10	125	1.2	0.1	0.5	–40 to +125		0.1		1		1.6	1.6
TMA36S-L	600	3	109	30	125	3	0.3	0.5	–40 to +125		0.1		2		1.5	4.5
TMA36G-L	600	3	115	30	25	3	0.5	0.5	–40 to +125		0.1		2		1.5	4.5
TMA36H-L	600	3	109	30	25	3	0.5	0.5	–40 to +125		0.1		2		1.5	4.5
TMA56S-L	600	5	102	50	125	5	0.5	2	–40 to +125		0.1		2		1.5	7
TMA56G-L	600	5	111	50	25	5	0.5	2	–40 to +125		0.1		2		1.5	7
TMA56H-L	600	5	101	50	25	5	0.5	2	–40 to +125		0.1		2		1.5	7
TMA86S-L	600	8	92	80	125	5	0.5	2	–40 to +125		0.1	25°C	2	125°C	1.5	12
TMA86G-L	600	8	107	80	25	5	0.5	2	–40 to +125		0.1		2		1.5	12
TMA86H-L	600	8	91	80	25	5	0.5	2	–40 to +125		0.1		2		1.5	12
TMA106S-L	600	10	85	100	125	5	0.5	2	–40 to +125		0.1		2		1.5	14
TMA106G-L	600	10	105	100	25	5	0.5	2	–40 to +125		0.1		2		1.5	14
TMA106H-L	600	10	83	100	25	5	0.5	2	–40 to +125		0.1		2		1.5	14
TMA126S-L	600	12	77	120	125	5	0.5	2	–40 to +125		0.1		2		1.5	17
TMA126G-L	600	12	103	120	25	5	0.5	2	–40 to +125		0.1		2		1.5	17
TMA126H-L	600	12	78	120	25	5	0.5	2	–40 to +125		0.1		2		1.5	17
TMA166S-L	600	16	66	160	125	5	0.5	2	–40 to +125		0.1		2		1.45	20
TMA166G-L	600	16	100	160	25	5	0.5	2	–40 to +125		0.1		2		1.45	20
TMA166H-L	600	16	65	160	25	5	0.5	2	–40 to +125		0.1		2		1.45	20
TMA166P-L	600	16	108	160	125	5	0.5	2	–40 to +125		0.1		2		1.4	20
TMA166B-L	600	16	98	160	125	5	0.5	2	–40 to +125		0.1		2		1.4	20
TMB166S-L	600	16	94	160	125	5	0.5	2	–40 to +150		0.1		2		1.45	20
TMA206S-L	600	20	53	190	125	5	0.5	2	–40 to +125		0.1		2		1.4	20
TMB206S-L	600	20	85	200	125	5	0.5	2	–40 to +150		0.1		2		1.4	20
TMA256B-L	600	25	83	250	125	5	0.5	2	–40 to +125		0.1		2		1.3	20

Electrical Characteristics (T_j = 25°C, unless otherwise specified)																			
V_{GT}					I_{GT}					V_{GD}			(dv/dt) c			$R_{th\ (j\text{-}c)}$	Package	Mass
Mode I (T2+, G+) (V) max	Mode II (T2+, G–) (V) max	Mode III (T2–, G–) (V) max	Conditions V_D (V)	Conditions R_L (Ω)	Mode I (T2+, G+) (mA) max	Mode II (T2+, G–) (mA) max	Mode III (T2–, G–) (mA) max	Conditions V_D (V)	Conditions R_L (Ω)		Conditions T_j (°C)	Conditions V_O (V)	(V/us) min	Conditions (dv/dt) c (–A/ms)	Conditions T_j (°C)	(°C/W) max		(g)
1.5	1.5	1.5	12	20	20	20	20	12	20	0.2	125	1/2V_{DRM}	5	1.5	125	4.5	FM20	2.0
1.5	1.5	1.5	12	20	20	20	20	12	20	0.2	125	1/2V_{DRM}	5	2.5	125	4	FM20	2.0
1.5	1.5	1.5	12	20	30	30	30	12	20	0.2	125	1/2V_{DRM}	10	4	125	3.7	FM20	2.0
1.5	1.5	1.5	12	20	30	30	30	12	20	0.2	125	1/2V_{DRM}	10	5	125	3.6	FM20	2.0
1.5	1.5	1.5	12	20	30	30	30	12	20	0.1	125	1/2V_{DRM}	10	6	125	3.5	FM20	2.0
1.5	1.5	1.5	12	20	30	30	30	12	20	0.2	125	1/2V_{DRM}	10	8	125	3.3	FM20	2.0
1.5	1.5	1.5	12	20	30	30	30	12	20	0.2	125	1/2V_{DRM}	10	8	125	1.2	MT100	6.0
1.5	1.5	1.5	12	20	30	30	30	12	20	0.2	125	1/2V_{DRM}	10	8	125	1.8	FM100	6.5
1.5	1.5	1.5	12	20	30	30	30	12	20	0.2	125	1/2V_{DRM}	10	10	125	3.2	FM20	2.0
1.5	1.5	1.5	12	20	30	30	30	12	20	0.2	125	1/2V_{DRM}	10	12	125	1.6	FM100	6.5
3.5	1.2	1.2	6	10	3	3	3	6	10	0.2	125	1/2V_{DRM}	1		125	20	STA8pin	2.0
1.5	1.5	1.5	12	20	15/20	15/20	15/20	12	20	0.2	125	1/2V_{DRM}	5	1.5	125	4.5	FM20	2.0
1.5	1.5	1.5	12	20	30	30	30	12	20	0.2	125	1/2V_{DRM}	5	1.5	125	3	TO220	2.5
1.5	1.5	1.5	12	20	30	30	30	12	20	0.2	125	1/2V_{DRM}	5	1.5	125	4.6	TO220F	2.0
1.5	1.5	1.5	12	20	15/20	15/20	15/20	12	20	0.2	125	1/2V_{DRM}	5	2.5	125	4	FM20	2.0
1.5	1.5	1.5	12	20	30	30	30	12	20	0.2	125	1/2V_{DRM}	5	2.5	125	2.5	TO220	2.5
1.5	1.5	1.5	12	20	30	30	30	12	20	0.2	125	1/2V_{DRM}	5	2.5	125	4.2	TO220F	2.0
1.5	1.5	1.5	12	20	20/30	20/30	20/30	12	20	0.2	125	1/2V_{DRM}	10	4	125	3.7	FM20	2.0
1.5	1.5	1.5	12	20	30	30	30	12	20	0.2	125	1/2V_{DRM}	10	4	125	2	TO220	2.5
1.5	1.5	1.5	12	20	30	30	30	12	20	0.2	125	1/2V_{DRM}	10	4	125	3.8	TO220F	2.0
1.5	1.5	1.5	12	20	20/30	20/30	20/30	12	20	0.2	125	1/2V_{DRM}	10	5	125	3.6	FM20	2.0
1.5	1.5	1.5	12	20	30	30	30	12	20	0.2	125	1/2V_{DRM}	10	5	125	1.8	TO220	2.5
1.5	1.5	1.5	12	20	30	30	30	12	20	0.2	125	1/2V_{DRM}	10	5	125	3.7	TO220F	2.0
1.5	1.5	1.5	12	20	20/30	20/30	20/30	12	20	0.2	125	1/2V_{DRM}	10	6	125	3.5	FM20	2.0
1.5	1.5	1.5	12	20	30	30	30	12	20	0.2	125	1/2V_{DRM}	10	6	125	1.6	TO220	2.5
1.5	1.5	1.5	12	20	30	30	30	12	20	0.2	125	1/2V_{DRM}	10	6	125	3.5	TO220F	2.0
1.5	1.5	1.5	12	20	20/30	20/30	20/30	12	20	0.2	125	1/2V_{DRM}	10	8	125	3.3	FM20	2.0
1.5	1.5	1.5	12	20	30	30	30	12	20	0.2	125	1/2V_{DRM}	10	8	125	1.4	TO220	2.5
1.5	1.5	1.5	12	20	30	30	30	12	20	0.2	125	1/2V_{DRM}	10	8	125	3.3	TO220F	2.0
1.5	1.5	1.5	12	20	30	30	30	12	20	0.2	125	1/2V_{DRM}	10	8	125	1.2	MT100	6.0
1.5	1.5	1.5	12	20	30	30	30	12	20	0.2	125	1/2V_{DRM}	10	8	125	1.8	FM100	6.5
1.5	1.5	1.5	12	20	30	30	30	12	20	0.2	125	1/2V_{DRM}	10	10	125	3.0	FM20	2.0
1.5	1.5	1.5	12	20	20/30	20/30	20/30	12	20	0.2	125	1/2V_{DRM}	10	10	125	3.2	FM20	2.0
1.5	1.5	1.5	12	20	30	30	30	12	20	0.2	125	1/2V_{DRM}	10	10	125	2.7	FM20	2.0
1.5	1.5	1.5	12	20	30	30	30	12	20	0.2	125	1/2V_{DRM}	10	12	125	1.6	FM100	6.5

Package Type (Dimensions)

• TO-220

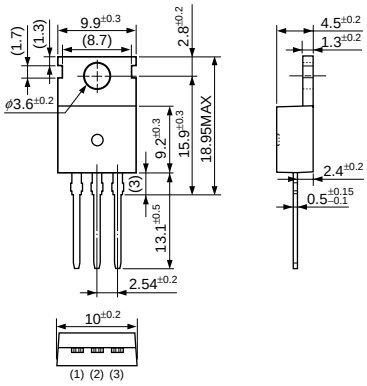

• TO-220F

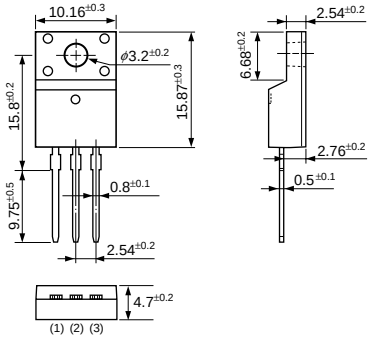

• FM20

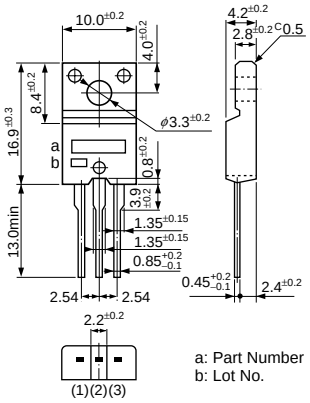

a: Part Number
b: Lot No.

Pin No.	
(1)	Cathode (T_1)
(2)	Anode (T_2)
(3)	Gate (G)

( ): Triacs

• MT100

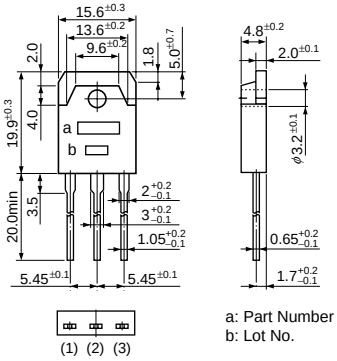

a: Part Number
b: Lot No.

• FM100

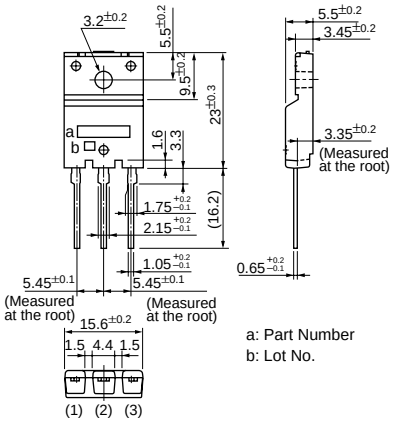

a: Part Number
b: Lot No.

(1) Terminal 1 (T_1)
(2) Terminal 2 (T_2)
(3) Gate (G)

• TO-220S Straight

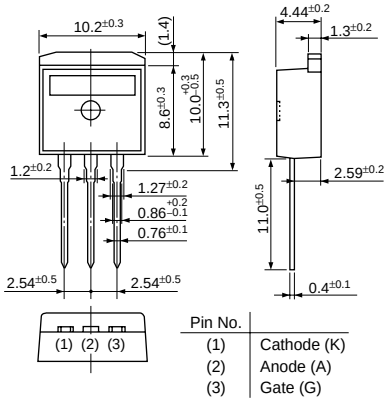

Pin No.	
(1)	Cathode (K)
(2)	Anode (A)
(3)	Gate (G)

• STA8Pin

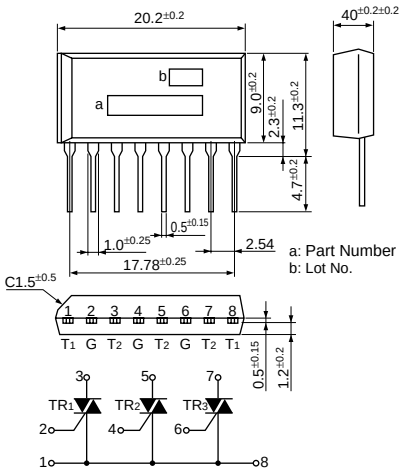

a: Part Number
b: Lot No.

• SLA12Pin

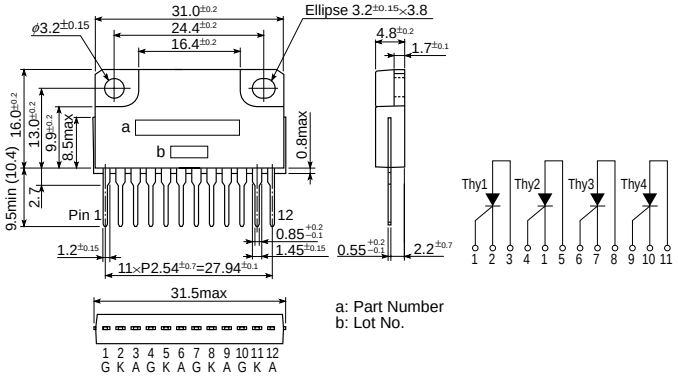

a: Part Number
b: Lot No.

(Unit: mm)

4

Diodes

Ordering Information

All products listed must be ordered in standard packing increments.

Series Name/Product Name	Package	Standard Packing Quantities					
		Bulk	Taping				
AG01x	Axial(φ2.4 body/φ0.6 lead)	–	V:5000(Reel)	V1:3000(Box)	V0:3000(Box)	WS:2500(Box)	WK:2500(Box)
AK0x	Axial(φ2.4 body/φ0.6 lead)	–	V:5000(Reel)	V1:3000(Box)	V0:3000(Box)	WS:2500(Box)	WK:2500(Box)
AL01x	Axial(φ2.4 body/φ0.6 lead)	–	V:5000(Reel)	V1:3000(Box)	V0:3000(Box)	WS:2500(Box)	WK:2500(Box)
AM01x	Axial(φ2.4 body/φ0.6 lead)	–	V:5000(Reel)	V1:3000(Box)	V0:3000(Box)	WS:2500(Box)	WK:2500(Box)
AP01x	Axial(φ2.4 body/φ0.6 lead)	–	V:5000(Reel)	V1:3000(Box)	V0:3000(Box)	WS:2500(Box)	WK:2500(Box)
AS01x	Axial(φ2.4 body/φ0.6 lead)	–	V:5000(Reel)	V1:3000(Box)	V0:3000(Box)	WS:2500(Box)	WK:2500(Box)
AU01x	Axial(φ2.4 body/φ0.6 lead)	–	V:5000(Reel)	V1:3000(Box)	V0:3000(Box)	WS:2500(Box)	WK:2500(Box)
AU02x	Axial(φ2.4 body/φ0.6 lead)	–	V:5000(Reel)	V1:3000(Box)	V0:3000(Box)	WS:2500(Box)	WK:2500(Box)
SHV-03	Axial(φ2.5 body/φ0.5 lead)	–	V1:5000(Reel)	V.:8000(Reel)			
SHV-06EN	Axial(φ2.5 body/φ0.5 lead)	–	V1:5000(Reel)	VD:8000(Reel)			
SHV-08EN	Axial(φ2.5 body/φ0.5 lead)	–	V1:5000(Reel)	VD:8000(Reel)			
EG01x	Axial(φ2.7 body/φ0.6 lead)	–	V:5000(Reel)	V1:2000(Box)	V0:2000(Box)	W:4000(Box)	
EK0x	Axial(φ2.7 body/φ0.6 lead)	–	V:5000(Reel)	V1:2000(Box)	V0:2000(Box)	W:4000(Box)	
EL02x	Axial(φ2.7 body/φ0.6 lead)	–	V:5000(Reel)	V1:2000(Box)	V0:2000(Box)	W:4000(Box)	
EM01x	Axial(φ2.7 body/φ0.6 lead)	–	V:5000(Reel)	V1:2000(Box)	V0:2000(Box)	W:4000(Box)	
EN01x	Axial(φ2.7 body/φ0.6 lead)	–	V:5000(Reel)	V1:2000(Box)	V0:2000(Box)	W:4000(Box)	
EP01x	Axial(φ2.7 body/φ0.6 lead)	–	V:5000(Reel)	V1:2000(Box)	V0:2000(Box)	W:4000(Box)	
ES01x	Axial(φ2.7 body/φ0.6 lead)	–	V:5000(Reel)	V1:2000(Box)	V0:2000(Box)	W:4000(Box)	
EU01x	Axial(φ2.7 body/φ0.6 lead)	–	V:5000(Reel)	V1:2000(Box)	V0:2000(Box)	W:4000(Box)	
EU02x	Axial(φ2.7 body/φ0.6 lead)	–	V:5000(Reel)	V1:2000(Box)	V0:2000(Box)	W:4000(Box)	
SVxx	Axial(φ2.7 body/φ0.6 lead)	–	V:5000(Reel)	V1:2000(Box)	V0:2000(Box)	W:4000(Box)	
VR-xx	Axial(φ2.7 body/φ0.6 lead)	–	V:5000(Reel)	V1:2000(Box)	V0:2000(Box)	W:4000(Box)	
EG1x	Axial(φ2.7 body/φ0.78 lead)	–	V:5000(Reel)	V1:2000(Box)	V0:2000(Box)		
EH1x	Axial(φ2.7 body/φ0.78 lead)	–	V:5000(Reel)	V1:2000(Box)	V0:2000(Box)		
EK1x	Axial(φ2.7 body/φ0.78 lead)	–	V:5000(Reel)	V1:2000(Box)	V0:2000(Box)		
EL1x	Axial(φ2.7 body/φ0.78 lead)	–	V:5000(Reel)	V1:2000(Box)	V0:2000(Box)		
EM1x	Axial(φ2.7 body/φ0.78 lead)	–	V:5000(Reel)	V1:2000(Box)	V0:2000(Box)		
EM2x	Axial(φ2.7 body/φ0.78 lead)	–	V:5000(Reel)	V1:2000(Box)	V0:2000(Box)		
ES1x	Axial(φ2.7 body/φ0.78 lead)	–	V:5000(Reel)	V1:2000(Box)	V0:2000(Box)		
EU1x	Axial(φ2.7 body/φ0.78 lead)	–	V:5000(Reel)	V1:2000(Box)	V0:2000(Box)		
EU2x	Axial(φ2.7 body/φ0.78 lead)	–	V:5000(Reel)	V1:2000(Box)	V0:2000(Box)		
RA1x	Axial(φ4.0 body/φ0.78 lead)	–	V:3000(Reel)	V1:1000(Box)			
RC2	Axial(φ4.0 body/φ0.78 lead)	–	V:3000(Reel)	V1:1000(Box)			
RF1x	Axial(φ4.0 body/φ0.78 lead)	–	V:3000(Reel)	V1:1000(Box)			
RG10x	Axial(φ4.0 body/φ0.78 lead)	–	V:3000(Reel)	V1:1000(Box)			
RG1x	Axial(φ4.0 body/φ0.78 lead)	–	V:3000(Reel)	V1:1000(Box)			
RH1x	Axial(φ4.0 body/φ0.78 lead)	–	V:3000(Reel)	V1:1000(Box)			
RK1x	Axial(φ4.0 body/φ0.78 lead)	–	V:3000(Reel)	V1:1000(Box)			
RL10x	Axial(φ4.0 body/φ0.78 lead)	–	V:3000(Reel)	V1:1000(Box)			
RM10x	Axial(φ4.0 body/φ0.78 lead)	–	V:3000(Reel)	V1:1000(Box)			
RM11x	Axial(φ4.0 body/φ0.78 lead)	–	V:3000(Reel)	V1:1000(Box)			
RM1x	Axial(φ4.0 body/φ0.78 lead)	–	V:3000(Reel)	V1:1000(Box)			
RN1x	Axial(φ4.0 body/φ0.78 lead)	–	V:3000(Reel)	V1:1000(Box)			
RP1x	Axial(φ4.0 body/φ0.78 lead)	–	V:3000(Reel)	V1:1000(Box)			
RS1x	Axial(φ4.0 body/φ0.78 lead)	–	V:3000(Reel)	V1:1000(Box)			
RU1x	Axial(φ4.0 body/φ0.78 lead)	–	V:3000(Reel)	V1:1000(Box)			
RU20x	Axial(φ4.0 body/φ0.78 lead)	–	V:3000(Reel)	V1:1000(Box)			
RU2x	Axial(φ4.0 body/φ0.78 lead)	–	V:3000(Reel)	V1:1000(Box)			
RX10x	Axial(φ4.0 body/φ0.78 lead)	–	V:3000(Reel)	V1:1000(Box)			
RD2x	Axial(φ4.0 body/φ0.98 lead)	–	V:3000(Reel)	V1:1000(Box)			
RG2x	Axial(φ4.0 body/φ0.98 lead)	–	V:3000(Reel)	V1:1000(Box)			
RH2x	Axial(φ4.0 body/φ0.98 lead)	–	V:3000(Reel)	V1:1000(Box)			
RK3x	Axial(φ4.0 body/φ0.98 lead)	–	V:3000(Reel)	V1:1000(Box)			
RL2x	Axial(φ4.0 body/φ0.98 lead)	–	V:3000(Reel)	V1:1000(Box)			
RM2x	Axial(φ4.0 body/φ0.98 lead)	–	V:3000(Reel)	V1:1000(Box)			
RN2x	Axial(φ4.0 body/φ0.98 lead)	–	V:3000(Reel)	V1:1000(Box)			
RO2x	Axial(φ4.0 body/φ0.98 lead)	–	V:3000(Reel)	V1:1000(Box)			
RU3x	Axial(φ4.0 body/φ0.98 lead)	–	V:3000(Reel)	V1:1000(Box)			
RH3x	Axial(φ5.2 body/φ1.2 lead)	500	V3:1500(Reel)	V4:1000(Box)			
RL3x	Axial(φ5.2 body/φ1.2 lead)	500	V3:1500(Reel)	V4:1000(Box)			
RM3x	Axial(φ5.2 body/φ1.2 lead)	500	V3:1500(Reel)	V4:1000(Box)			
RN3x	Axial(φ5.2 body/φ1.2 lead)	500	V3:1500(Reel)	V4:1000(Box)			
RP3F	Axial(φ5.2 body/φ1.2 lead)	500	V3:1500(Reel)	V4:1000(Box)			
RS3x	Axial(φ5.2 body/φ1.2 lead)	500	V3:1500(Reel)	V4:1000(Box)			
RU30x	Axial(φ5.2 body/φ1.2 lead)	500	V3:1500(Reel)	V4:1000(Box)			
RU31x	Axial(φ5.2 body/φ1.2 lead)	500	V3:1500(Reel)	V4:1000(Box)			
RX3x	Axial(φ5.2 body/φ1.2 lead)	500	V3:1500(Reel)	V4:1000(Box)			
RG4x	Axial(φ6.5 body/φ1.4 lead)	500	–				
RH4x	Axial(φ6.5 body/φ1.4 lead)	500	–				
RJ4x	Axial(φ6.5 body/φ1.4 lead)	500	–				
RK4x	Axial(φ6.5 body/φ1.4 lead)	500	–				
RL4x	Axial(φ6.5 body/φ1.4 lead)	500	–				

Series Name/Product Name	Package	Standard Packing Quantities					
		Bulk	Taping				
RM4x	Axial(ϕ6.5 body/ϕ1.4 lead)	500	–				
RN4x	Axial(ϕ6.5 body/ϕ1.4 lead)	500	–				
RS4x	Axial(ϕ6.5 body/ϕ1.4 lead)	500	–				
RU4x	Axial(ϕ6.5 body/ϕ1.4 lead)	500	–				
RW5x	Axial(ϕ6.5 body/ϕ1.4 lead)	500	–				
SPB-x	D pack(Surface-mount)	–	VL:3000(Reel)	VR:3000(Reel)			
SPX-xxx	D pack(Surface-mount)	–	VL:3000(Reel)	VR:3000(Reel)			
RBV-1xxx	RVB-60	250	–				
RBV-2xxx	RVB-60	250	–				
RBV-6xx	RVB-60	250	–				
SJPA-xx	SJP	–	V:1800(Reel)				
SJPB-xx	SJP	–	V:1800(Reel)				
SJPE-xx	SJP	–	V:1800(Reel)				
SJPJ-xx	SJP	–	V:1800(Reel)				
SJPL-xx	SJP	–	V:1800(Reel)				
SJPM-xx	SJP	–	V:1800(Reel)				
SJPW-xx	SJP	–	V:1800(Reel)				
SJPX-xx	SJP	–	V:1800(Reel)				
SJPZ-xx	SJP	–	V:1800(Reel)				
SZ-10xx	SZ-10(Surface-mount)	–	VL:750(Reel)	VR:750(Reel)			
FMC-2xU	TO220F(2-element)	500	–				
FM2-2202	TO220F(Center-tap)	500	–				
FMB-2x	TO220F(Center-tap)	500	–				
FME-2x	TO220F(Center-tap)	500	–				
FMEN-2x	TO220F(Center-tap)	500	–				
FMG-1x	TO220F(Center-tap)	500	–				
FMG-2x	TO220F(Center-tap)	500	–				
FMJ-2x	TO220F(Center-tap)	500	–				
FML-1x	TO220F(Center-tap)	500	–				
FML-2x	TO220F(Center-tap)	500	–				
FMM-2x	TO220F(Center-tap)	500	–				
FMU-1x	TO220F(Center-tap)	500	–				
FMU-2x	TO220F(Center-tap)	500	–				
FMW-2x	TO220F(Center-tap)	500	–				
FMX-1x	TO220F(Center-tap)	500	–				
FMX-2x	TO220F(Center-tap)	500	–				
FMXA-2x	TO220F(Center-tap)	500	–				
FMXB-2x	TO220F(Center-tap)	500	–				
FMXJ-2x	TO220F(Center-tap)	500	–				
FMB-G1x	TO220F-2Pin	500	–				
FMB-G2x	TO220F-2Pin	500	–				
FMC-G2x	TO220F-2Pin	500	–				
FMD-G2x	TO220F-2Pin	500	–				
FMG-G2x	TO220F-2Pin	500	–				
FML-G1x	TO220F-2Pin	500	–				
FML-G2x	TO220F-2Pin	500	–				
FMN-G1x	TO220F-2Pin	500	–				
FMP-G1x	TO220F-2Pin	500	–				
FMQ-G1x	TO220F-2Pin	500	–				
FMQ-G2x	TO220F-2Pin	500	–				
FMU-G1x	TO220F-2Pin	500	–				
FMU-G2x	TO220F-2Pin	500	–				
FMXA-1x	TO220F-2Pin	500	–				
FMX-G1x	TO220F-2Pin	500	–				
FMX-G2x	TO220F-2Pin	500	–				
FMC-2xUA	TO220F-2Pin(2-element)	500	–				
MPE-2x	TO220S(Surface-mount)	–	VR:1000(Reel)				
MPL-102S	TO220S(Surface-mount)	–	VR:1000(Reel)				
MPEN-2x	TO263(Surface-mount)	–	VL:800(Reel)	VR:800(Reel)			
MPL-1036S	TO263(Surface-mount)	–	VL:800(Reel)	VR:800(Reel)			
FMD-4x	TO3PF(Center-tap)	500	–				
FMXA-4x	TO3PF(Center-tap)	500	–				
FML-4x	TO-3PF(Center-tap)	500	–				
FMP-G5x	TO3PF-2Pin	500	–				
FMQ-G5x	TO3PF-2Pin	500	–				
FMR-G5x	TO3PF-2Pin	500	–				
FMV-G5x	TO3PF-2Pin	500	–				

Taping Specifications

Taping Name	Taping Type, Dimensions (mm)	Packing Dimensions (mm) and Packing Note	Quantity
V To specify the taping type, add a suffix [V]	**Axial taping** 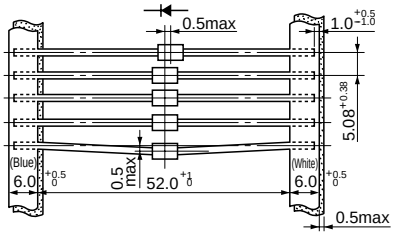 	**Reel** 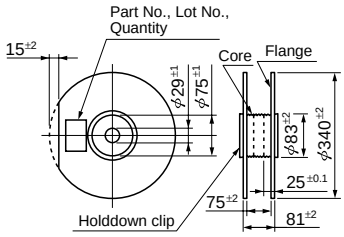 	5,000 pcs/reel (2.7φ body 2.4φ body) 3,000 pcs/reel (4φ body)
V1 To specify the taping type, add a suffix [V1]	**Axial taping** 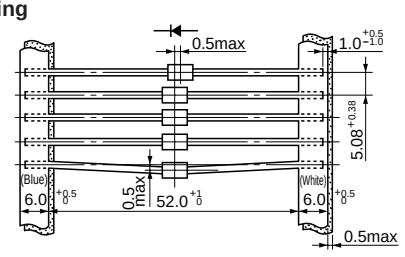 	**Ammunition (Ammo) pack** 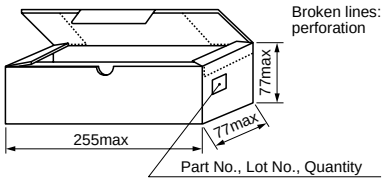 	2,000 pcs/box (2.7φ body) 3,000 pcs/box (2.4φ body) 1,000 pcs/box (4φ body)
V0 To specify the taping type, add a suffix [V0]	**Axial taping** 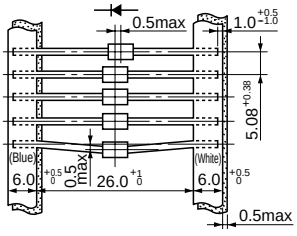 	**Ammunition (Ammo) pack** 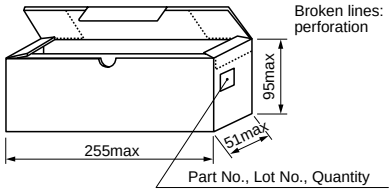 	2,000 pcs/box (2.7φ body) 3,000 pcs/box (2.4φ body)
V3 To specify the taping type, add a suffix [V3]	**Axial taping** 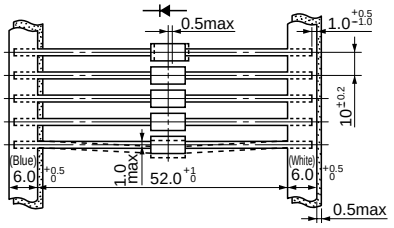 	**Reel** 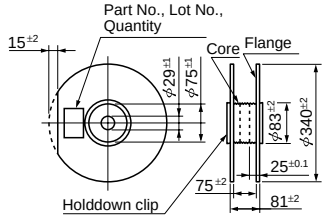 	1,500 pcs/reel (5.2φ body)
V4 To specify the taping type, add a suffix [V4]	**Axial taping** 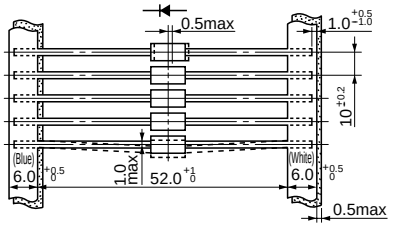 	**Ammunition (Ammo) pack** 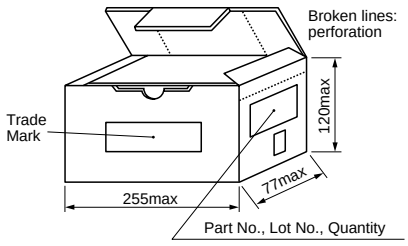 	1,000 pcs/box (5.2φ body)

Taping Name	Taping Type, Dimensions (mm)	Packing Dimensions (mm) and Packing Note	Quantity
W To specify the taping type, add a suffix [W]	**Radial taping** 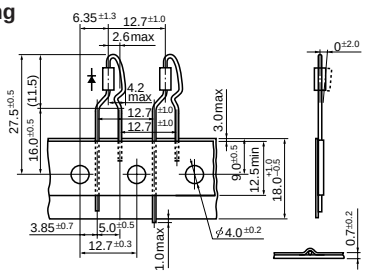	**Ammunition (Ammo) pack** 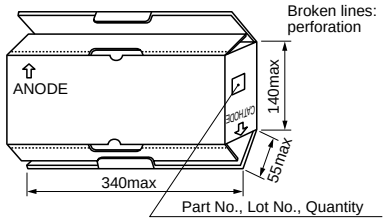	4,000 pcs/box (2.7ϕ body 0.6ϕ lead only)
WS To specify the taping type, add a suffix [WS]	**Radial taping (for A0 series)** 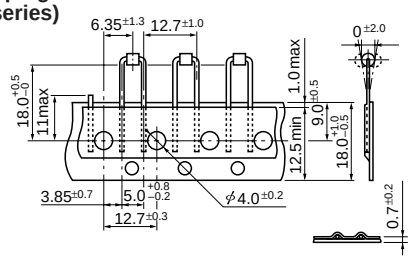	**Ammunition (Ammo) pack** 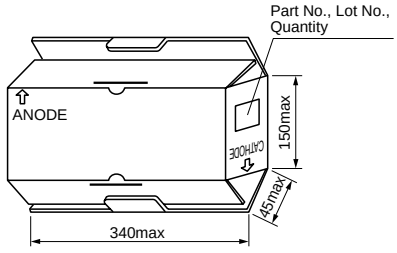	2,500 pcs/box (2.4ϕ body)
WK To specify the taping type, add a suffix [WK]	**Radial taping (for A0 series)** 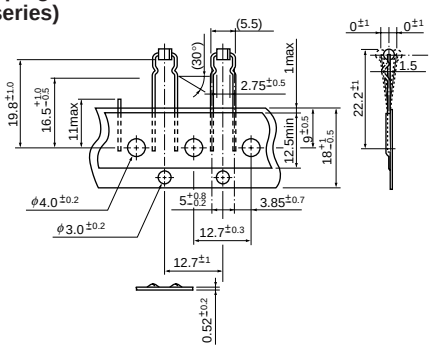		

High Voltage Rectifier Diodes Taping Specifications

Taping Name	Taping Type, Dimensions (mm)	Packing Dimensions (mm) and Packing Note	Quantity
V1 To specify the taping type, add a suffix [V1]	Axial taping 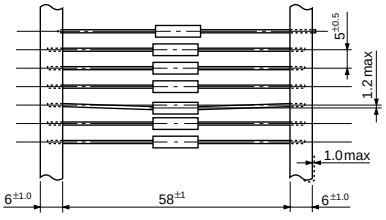	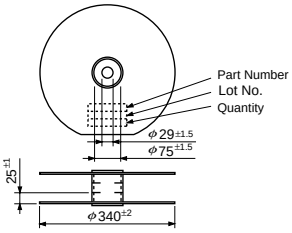	5000 pcs/reel
VD To specify the taping type, add a suffix [VD]	Axial taping 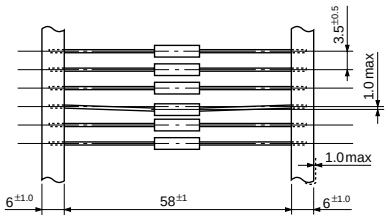	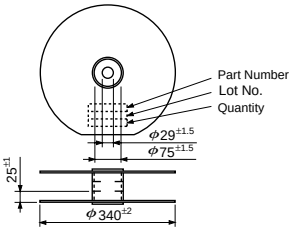	8000 pcs/reel

Surface-Mount Taping Specifications

Taping Name	Taping Type, Dimensions (mm)	Packing Dimensions (mm) and Packing Note	Quantity
SJP **VL / VR** To specify the taping type, add a suffix [VL] or [VR]	Emboss Taping 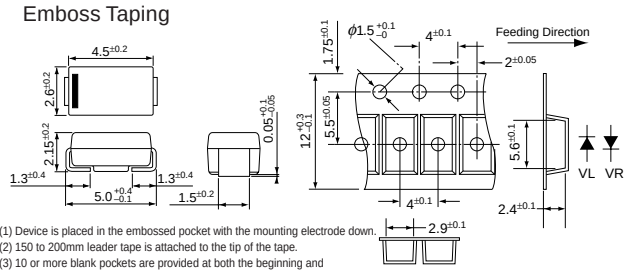 (1) Device is placed in the embossed pocket with the mounting electrode down. (2) 150 to 200mm leader tape is attached to the tip of the tape. (3) 10 or more blank pockets are provided at both the beginning and the end of the tape.	Reel 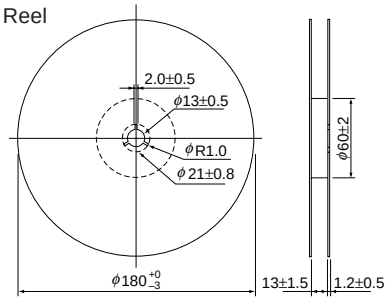	1800 pcs/reel
D Pack **VL** To specify the taping type, add a suffix [VL]	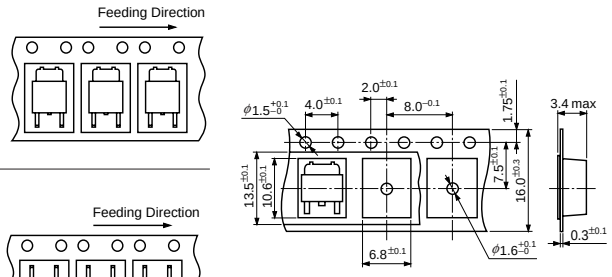	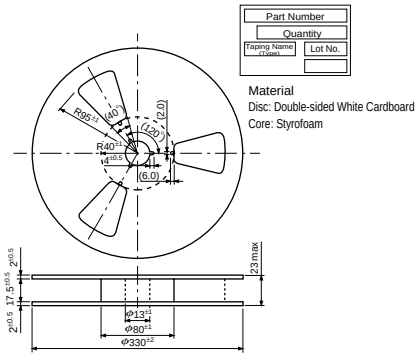 Material Disc: Double-sided White Cardboard Core: Styrofoam	3000 pcs/reel
D Pack **VR** To specify the taping type, add a suffix [VR]	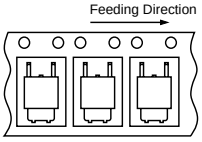		3000 pcs/reel
TO-220S **VR** To specify the taping type, add a suffix [VR]	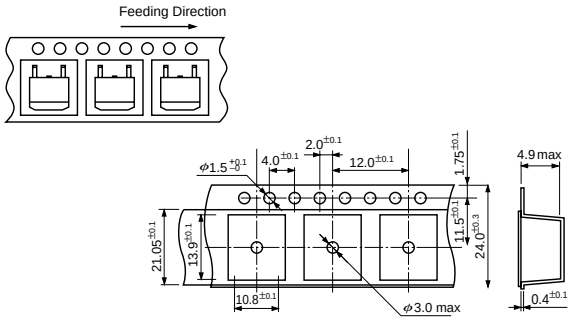	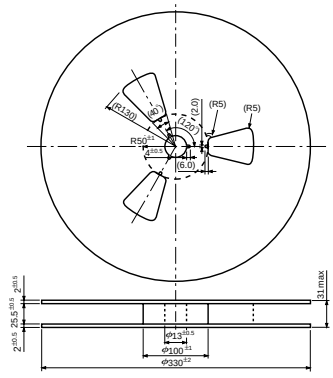	1000 pcs/reel

Power Zener Surface-Mount Taping Specifications

Taping Name	Taping Type, Dimensions (mm)	Packing Dimensions (mm) and Packing Note	Quantity
VL To specify the taping type, add a suffix [VL]	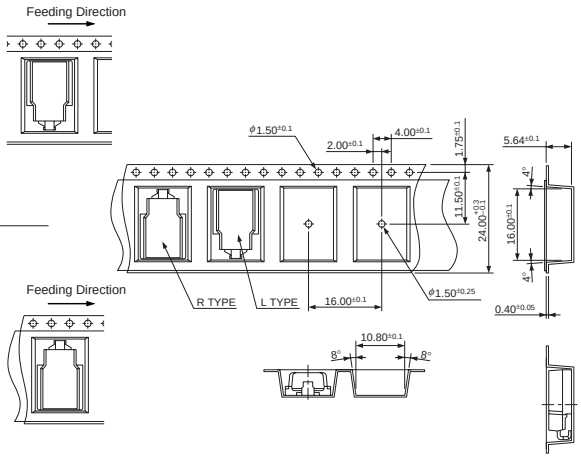	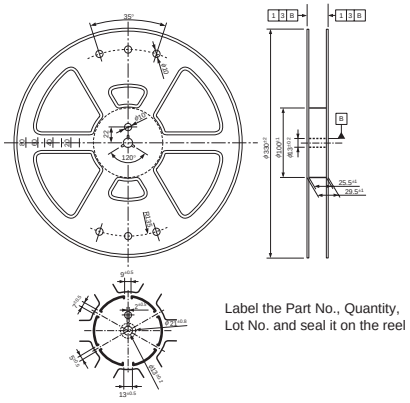 Label the Part No., Quantity, Lot No. and seal it on the reel	750 pcs/reel
VR To specify the taping type, add a suffix [VR]			750 pcs/reel

Application Note

■ General Description

(1) Lead Forming

When forming leads, hold the lead wire on the main body's side so as to prevent stress from being applied to the main body.

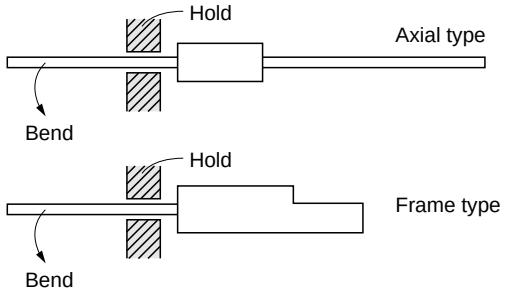

(2) Mounting

To mount a frame-type diode on a heatsink, use its screw hole. Do not fix its resin body as the silicon chip may get broken.

(3) Temperature Measurement

For an axial type diode, measure the temperature of the lead wire on the main body side. The thermocouple to be used must be as thin as possible (approximately ϕ0.125mm).

(4) Temperature Rise Consideration

A diode's temperature increases due to losses from forward current, reverse current and reverse recovery time.
In normal use, losses are mainly attributable to forward current and voltage. However, in high frequency circuits such as switching power supplies, losses due to reverse recovery time also occurs. Moreover, in diodes having large reverse currents like Schottky barrier diode losses due to reverse current cannot be disregarded.
Forward loss tends to decrease at high temperatures. However, reverse loss tends to increase at high temperatures. Therefore, it is necessary to consider the ambient temperature when verifying operation.

(5) Inrush Current

In a capacitor-input type rectifier circuit, inrush current flows when the power supply is switched on. The peak value of this inrush current shall be set less than peak forward surge current I_{FSM} (I^2t can also be obtained but set the minimum pulse width to 1 msec). The value of IFSM is guaranteed for a single shot only. If the inrush current is repeated within a short period of time, the derating has to be taken into account.

(6) Peak Value Current

Considering normal use, limit of the peak value current must be set to 10 times of the average current IF (AV). If the peak value increases. the diode's forward loss also increases. In this case, check the temperature rise.

● Carefully study the mounting method when the usage environment is prone to creeping discharge.

■ Surface-Mount Diodes

(Part Number Type: SJP)

Soldering (common to flow and reflow)

i) Use rosin based flux. Never use acidic fluxes.
ii) To prevent a large thermal stress, preheat within 1 to 2 minutes at 150°C and solder within the usable range shown below.

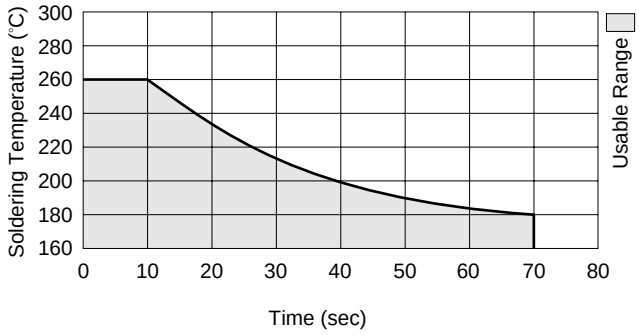

iii) For using a soldering iron, use the following references:
Temperature of soldering iron tip:
Lower than 300ºC
(Power of the soldering iron: 30W or lower)
The soldering tip must be as thin as possible.
Soldering time: Less than 10 seconds

Reference SJP Series Copper Laminate Pattern

(Unit : mm)

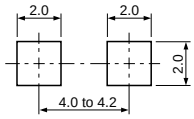

Contact us if there is any unclear point.

Marking Guide

1 Axial (A0)

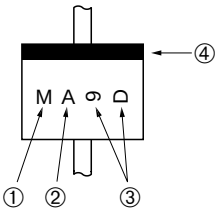

①Part Number (abbreviation)
The AM01 is indicated as "M."
②Class
Z: 200V None: 400V A: 600V
B: 800V C: 1000V
③Manufacturing date
First letter: Year (Last digit of year)
Second letter: Month (1 to 9, O, N, D)
④Cathode band: Continuous band
Color of the band: White(Yellow for AU02 series)

2 Axial (E0, E1)

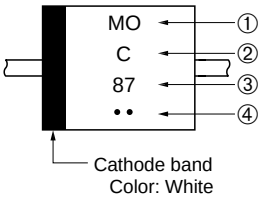

①Part Number (abbreviation)
EM01, EM2, EM1 are indicated as MO, M2 and M1, respectively.
②Class
Z: 200V None: 400V A: 600V
B: 800V C: 1000V F: 1500V
But EU02A is indicated as A2 and EU2YX as Y.
③Manufacturing date
First letter: Year (Last digit of year)
Second letter: Month (1 to 9, O, N, D)
④Manufacturing period
• First 10 days of month
•• Middle 10 days of month
••• Last 10 days of month

3 Axial (R1, R2, R3, R4)

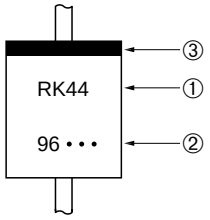

①Part Number: 2 set marking
②Manufacturing date and period: 2 set marking
First letter: Year (Last digit of year)
Second letter: Month (1 to 9, O, N, D)
• First 10 days of month
•• Middle 10 days of month
••• Last 10 days of month
③Cathode band

Color of the band:
- White: For Power Supply and SBD
- Yellow: For Medium speed
- Red: For Fast and ultrafast

4 RBV

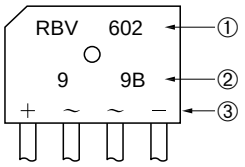

①Part Number
②Lot No.
First letter: Year (Last digit of year)
Second letter: Month (1 to 9, O, N, D)
Third letter: A—First 10 days of month
B—Middle 10 days of month
C—Last 10 days of month
③Input/output marking
Laser marking or White ink marking

5 TO-220F type

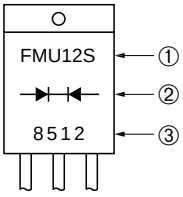

①Part Number
FMU-12S is indicated as "FMU12S."
②Polarity: Rectifier Symbol
③Lot No.
First letter: Year (Last digit of year)
Second letter: Month (1 to 9, O, N, D)
Third and fourth letters: Day
Laser marking or White ink marking

(1-chip type)

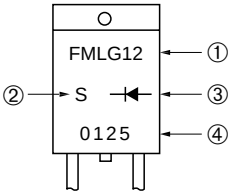

①Part Number: Excluding last letter
FML-G12S is indicated as "FML-G12."
②Last letter of Part Number
③Polarity: Rectifier Symbol
④Lot No.
First letter: Year (Last digit of year)
Second letter: Month (1 to 9, O, N, D)
Third and fourth letters: Day
Laser marking or White ink marking

6 TO-3PF, FM100 type

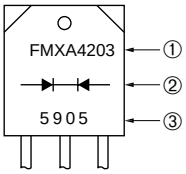

(1-chip type)

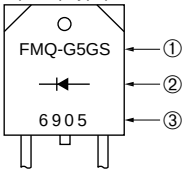

①Part Number: Full name
②Polarity: Rectifier Symbol
③Lot No.
First letter: Year (Last digit of year)
Second letter: Month (1 to 9, O, N, D)
Third and fourth letters: Day
Laser marking or White ink marking

7 Surface-Mount (SJP)

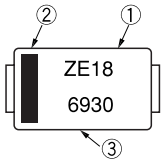

①Part Number
②Polarity: Rectifier Symbol
③Lot No.
First letter: Year (Last digit of year)
Second letter: Month (1 to 9, O, N, and D)
Third and fourth letters: Day

8 Surface-Mount (D pack)

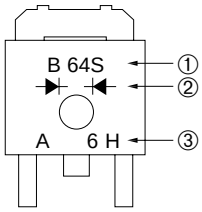

①Part Number
②Polarity: Rectifier Symbol
③Lot No.
First letter: Lot code
Second letter: Year (Last digit of year)
Third letter: Month (A to M except I)

9 Surface-Mount (TO-220S)

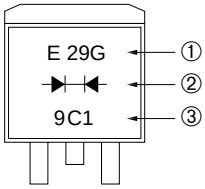

①Part Number
②Polarity: Rectifier Symbol
③Lot No.
First letter: Year (Last digit of year)
Second letter: Month (A to M except I)
Third letter: Week

10 SZ-10 Series

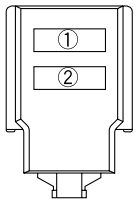

①Part Number
②Lot No.
First letter: Year (Last digit of year)
Second letter: Month (1 to 9, O, N, and D)
Third letter: Day

11 Silicon Varistors

Refer to P213

4-1 Rectifier Diodes

●Surface-Mount

V_{RM} (V)	I_F (AV) (A) Values in parentheses are for the products with heatsinks	Package	Part Number	I_{FSM} (A) 50Hz Single Half Sine Wave	T_j (°C)	T_{stg} (°C)	V_F (V) max	I_F (A)	I_R (μA) $V_R=V_{RM}$ max	I_R(H) (μA) $V_R=V_{RM}$ max	T_a (°C)	Rth(j-l) Rth(j-c) (°C/W)	Mass (g)
400	2.0	Surface-Mount (SJP)	SJPM-H4	45	-40 to +150		1.1	2.0	10	50	150(Tj)	20	0.072

●Thru-Hole

V_{RM} (V)	I_F (AV) (A) Values in parentheses are for the products with heatsinks	Package Axial (Body Diameter/Lead Diameter)	Part Number	I_{FSM} (A) 50Hz Single Half Sine Wave	T_j (°C)	T_{stg} (°C)	V_F (V) max	I_F (A)	I_R (μA) $V_R=V_{RM}$ max	I_R(H) (μA) $V_R=V_{RM}$ max	T_a (°C)	Rth(j-l) Rth(j-c) (°C/W)	Mass (g)
100	1.0	Axial(φ2.7/φ0.78)	EM 1Y	45	-40 to +150		0.97	1.0	10	50	100	17	0.3
	1.7(3.0)	Axial(φ6.5/φ1.4)	RM 4Y	200	-40 to +150		0.95	3.0	10	50	100	8	1.2
200	1.0	Axial(φ2.4/φ0.6)	AM01Z	35	-40 to +150		0.98	1.0	10	50	100	22	0.13
	1.0	Axial(φ2.7/φ0.6)	EM01Z	45	-40 to +150		0.97	1.0	10	50	100	20	0.2
	1.0	Axial(φ2.7/φ0.78)	EM 1Z	45	-40 to +150		0.97	1.0	10	50	100	17	0.3
	1.0	Axial(φ4.0/φ0.78)	RM 1Z	50	-40 to +150		0.95	1.0	5	50	100	15	0.4
	1.2	Axial(φ4.0/φ0.98)	RO 2Z	80	-40 to +150		0.92	1.5	10	50	100	12	0.61
	1.2	Axial(φ4.0/φ0.98)	RM 2Z	100	-40 to +150		0.91	1.5	10	50	100	12	0.6
	1.5	Axial(φ4.0/φ0.78)	RM 10Z	120	-40 to +150		0.91	1.5	10	50	100	15	0.4
	1.7(3.0)	Axial(φ6.5/φ1.4)	RM 4Z	200	-40 to +150		0.95	3.0	10	50	100	8	1.2
	10	TO-220F(Center-tap)	FMM-22S, R	100	-40 to +150		1.10	5.0	10	100	100	4.0	2.1
400	1.0	Axial(φ2.4/φ0.6)	AM01	35	-40 to +150		0.98	1.0	10	50	100	22	0.13
	1.0	Axial(φ2.7/φ0.6)	EM01	45	-40 to +150		0.97	1.0	10	50	100	20	0.2
	1.0	Axial(φ2.7/φ0.78)	EM 1	45	-40 to +150		0.97	1.0	10	50	100	17	0.3
	1.0	Axial(φ4.0/φ0.78)	RM 1	50	-40 to +150		0.95	1.0	5	50	100	15	0.4
	1.2	Axial(φ2.7/φ0.78)	EM 2	80	-40 to +150		0.92	1.2	10	50	100	17	0.3
	1.2	Axial(φ4.0/φ0.98)	RO 2	80	-40 to +150		0.92	1.5	10	50	100	12	0.61
	1.2	Axial(φ4.0/φ0.98)	RM 2	100	-40 to +150		0.91	1.5	10	50	100	12	0.6
	1.2	Axial(φ4.0/φ0.78)	RM 10	150	-40 to +150		0.91	1.5	10	50	100	15	0.4
	2.5	Axial(φ5.2/φ1.2)	RM 3	150	-40 to +150		0.95	2.5	10	100	150	10	1.0
	1.7(3.0)	Axial(φ6.5/φ1.4)	RM 4	200	-40 to +150		0.95	3.0	10	50	100	8	1.2
	10	TO-220F(Center-tap)	FMM-24S, R	100	-40 to +150		1.10	5.0	10	100	100	4.0	2.1
600	1.0	Axial(φ2.4/φ0.6)	AM01A	35	-40 to +150		0.98	1.0	10	50	100	22	0.13
	1.0	Axial(φ2.7/φ0.6)	EM01A	45	-40 to +150		0.97	1.0	10	50	100	20	0.2
	1.0	Axial(φ2.7/φ0.78)	EM 1A	45	-40 to +150		0.97	1.0	10	50	100	17	0.3
	1.0	Axial(φ4.0/φ0.78)	RM 1A	50	-40 to +150		0.95	1.0	5	50	100	15	0.4
	1.2	Axial(φ2.7/φ0.78)	EM 2A	80	-40 to +150		0.92	1.2	10	50	100	17	0.3
	1.2	Axial(φ4.0/φ0.78)	RM 11A	100	-40 to +150		0.92	1.5	10	50	100	15	0.4
	1.2	Axial(φ4.0/φ0.98)	RM 2A	100	-40 to +150		0.91	1.5	10	50	100	12	0.6
	1.2	Axial(φ4.0/φ0.78)	RM 10A	150	-40 to +150		0.91	1.5	10	50	100	15	0.4
	2.5	Axial(φ5.2/φ1.2)	RM 3A	150	-40 to +150		0.95	2.5	10	100	100	10	1.0
	1.7(3.0)	Axial(φ6.5/φ1.4)	RM 4A	200	-40 to +150		0.95	3.0	10	50	100	8	1.2
	1.8(3.2)	Axial(φ6.5/φ1.4)	RM 4AM	350	-40 to +150		0.92	3.5	10	50	100	8	1.2
	10	TO-220F(Center-tap)	FMM-26S, R	100	-40 to +150		1.10	5.0	10	100	100	4.0	2.1
800	0.8	Axial(φ4.0/φ0.78)	RM 1B	40	-40 to +150		1.2	1.0	5	50	100	15	0.4
	1.0	Axial(φ2.7/φ0.78)	EM 1B	35	-40 to +150		0.97	1.0	20	100	100	17	0.3
	1.2	Axial(φ2.7/φ0.78)	EM 2B	80	-40 to +150		0.92	1.2	10	50	100	17	0.3
	1.2	Axial(φ4.0/φ0.98)	RO 2B	80	-40 to +150		0.92	1.5	10	50	100	12	0.61
	1.2	Axial(φ4.0/φ0.78)	RM 11B	100	-40 to +150		0.92	1.5	10	50	100	15	0.4
	1.2	Axial(φ4.0/φ0.98)	RM 2B	100	-40 to +150		0.91	1.5	10	50	100	12	0.6
	1.2	Axial(φ4.0/φ0.78)	RM 10B	150	-40 to +150		0.91	1.5	10	50	100	15	0.4
	2.5	Axial(φ5.2/φ1.2)	RM 3B	150	-40 to +150		0.95	2.5	10	100	150	10	1.0
1000	0.8	Axial(φ4.0/φ0.78)	RM 1C	40	-40 to +150		1.2	1.0	5	50	100	15	0.4
	1.0	Axial(φ2.7/φ0.78)	EM 1C	35	-40 to +150		0.97	1.0	20	100	100	17	0.3
	1.2	Axial(φ4.0/φ0.98)	RO 2C	80	-40 to +150		0.92	1.5	10	50	100	12	0.61
	1.2	Axial(φ4.0/φ0.78)	RM 11C	100	-40 to +150		0.92	1.5	10	50	100	15	0.4
	1.2	Axial(φ4.0/φ0.98)	RM 2C	100	-40 to +150		0.91	1.5	10	50	100	12	0.6
	2.0	Axial(φ5.2/φ1.2)	RM 3C	100	-40 to +150		0.95	2.5	10	300	150 (Tj)	10	1.0
	1.7(3.0)	Axial(φ6.5/φ1.4)	RM 4C	150	-40 to +150		0.95	3.0	10	50	100	8	1.2

●Bridge

V_{RM} (V)	I_F (AV) (A) Values in parentheses are for the products with heatsinks	Package	Part Number	I_{FSM} (A) 50Hz Single Half Sine Wave	T_j (°C)	T_{stg} (°C)	V_F (V) max	I_F (A)	I_R (μA) $V_R=V_{RM}$ max	$I_R(H)$ (μA) $V_R=V_{RM}$ max	T_a (°C)	Rth(j-l) Rth(j-c) (°C/W)	Mass (g)
100	6.0	RBV-60	RBV-601	120	-40 to +150		1.00	3.0	10	100	100	3.0	6.45
200	6.0	RBV-60	RBV-602L*1	100	-40 to +150		1.00	3.0	250	1000	100	3.0	6.45
	6.0	RBV-60	RBV-602	120	-40 to +150		1.00	3.0	10	100	100	3.0	6.45
400	6.0	RBV-60	RBV-604	120	-40 to +150		1.05	3.0	10	100	100	3.0	6.45
600	6.0	RBV-60	RBV-606	120	-40 to +150		1.05	3.0	10	100	100	3.0	6.45
	13	RBV-60	RBV-1306	80	-40 to +150		1.20	6.5	10	100	100	1.5	6.45
	15	RBV-60	RBV-1506S	150	-40 to +150		1.10	7.5	10	200	100	1.5	6.45
	15	RBV-60	RBV-1506J	150	-40 to +175		1.10	7.5	10	200	150	1.5	6.45
	15	RBV-60	RBV-1506	200	-40 to +150		1.05	7.5	50	200	100	1.5	6.45
	25	RBV-60	RBV-2506	350	-40 to +150		1.05	12.5	50	200	100	1.5	6.45
	30	RBV-60	RBV-3006	400	-40 to +150		0.96	15	50	500	150	1.5	6.45
800	6.0	RBV-60	RBV-608	170	-40 to +150		0.95	3.0	10	100	100	3.0	6.45
1000	15	RBV-60	RBV-150C	200	-40 to +150		1.05	7.5	50	200	100	1.5	6.45

*1: Ultrafast recovery diode (trr=50ns)

4-2 Fast Recovery Diodes

●Thru-Hole

V_{RM} (V)	I_F (AV) (A) Values in parentheses are for the products with heatsinks	Package Axial (Body Diameter/Lead Diameter)	Part Number	I_{FSM} (A) 50Hz Single Half Sine Wave	T_j (°C)	T_{stg} (°C)	V_F (V) max	I_F (A)	I_R (μA) $V_R=V_{RM}$ max	I_R(H) (μA) $V_R=V_{RM}$ max	T_a (°C)	trr① (μs)	I_F/I_{RP} (mA)	trr② (μs)	I_F/I_{RP} (mA)	Rth(j-l) Rth(j-c) (°C/W)	Mass (g)
200	0.5	Axial(φ2.7/φ0.6)	EU01Z	15	-40 to +150		1.0	0.5	10	150	100	0.4	10/10	0.18	10/20	20	0.2
	0.5	Axial(φ2.7/φ0.78)	EU 1Z	15	-40 to +150		1.0	0.5	10	150	100	0.4	10/10	0.18	10/20	17	0.3
	0.5	Axial(φ2.4/φ0.6)	AU01Z	15	-40 to +150		1.7	0.5	10	150	100	0.4	10/10	0.18	10/20	22	0.13
	0.6	Axial(φ4.0/φ0.78)	RH 1Z	35	-40 to +150		1.3	0.6	5	70	150	4	10/10	1.3	10/20	15	0.4
	0.7	Axial(φ2.7/φ0.78)	ES 1Z	30	-40 to +150		2.5	0.8	10	200	100	1.5	10/10	0.6	10/20	17	0.3
	0.8	Axial(φ2.4/φ0.6)	AU02Z	25	-40 to +150		1.3	0.8	10	250	100	0.4	10/10	0.18	10/20	22	0.13
	1.0	Axial(φ2.7/φ0.6)	EU02Z	15	-40 to +150		1.4	1.0	10	300	100	0.4	10/10	0.18	10/20	20	0.2
	1.0	Axial(φ2.7/φ0.78)	EU 2Z	15	-40 to +150		1.4	1.0	10	300	100	0.4	10/10	0.18	10/20	17	0.3
	1.0	Axial(φ4.0/φ0.78)	RU 2Z	20	-40 to +150		1.5	1.0	10	300	100	0.4	10/10	0.18	10/20	15	0.4
	1.5(3.5)	Axial(φ5.2/φ1.2)	RU 30Z	80	-40 to +150		0.97	3.5	10	300	100	0.4	10/10	0.18	10/20	10	1.0
	2.0(3.5)	Axial(φ6.5/φ1.4)	RU 4Z	70	-40 to +150		1.3	3.5	10	300	100	0.4	10/10	0.18	10/20	8	1.2
	5.0	TO-220F(Center-tap)	FMU-12S, R	30	-40 to +150		1.5	2.5	50	500	100	0.4	100/100	0.18	100/200	4.0	2.1
	10	TO-220F(Center-tap)	FMU-22S, R	40	-40 to +150		1.5	5.0	50	500	100	0.4	100/100	0.18	100/200	4.0	2.1
400	0.25	Axial(φ2.7/φ0.6)	EU01	15	-40 to +150		2.5	0.25	10	150	100	0.4	10/10	0.18	10/20	20	0.2
	0.25	Axial(φ2.7/φ0.78)	EU 1	15	-40 to +150		2.5	0.25	10	150	100	0.4	10/10	0.18	10/20	17	0.3
	0.25	Axial(φ4.0/φ0.78)	RU 1	15	-40 to +150		2.5	0.25	10	200	100	0.4	10/10	0.18	10/20	15	0.4
	0.5	Axial(φ2.4/φ0.6)	AU01	15	-40 to +150		1.7	0.5	10	150	100	0.4	10/10	0.18	10/20	22	0.13
	0.6	Axial(φ2.4/φ0.6)	AS01	20	-40 to +150		1.5	0.6	10	50	100	1.5	10/10	0.6	10/20	22	0.13
	0.6	Axial(φ2.7/φ0.78)	EH 1	30	-40 to +150		1.35	0.6	10	200	150	4	10/10	1.3	10/20	17	0.3
	0.7	Axial(φ2.7/φ0.78)	ES 1	30	-40 to +150		2.5	0.8	10	200	100	1.5	10/10	0.6	10/20	20	0.2
	0.8	Axial(φ2.4/φ0.6)	AU02	25	-40 to +150		1.3	0.8	10	250	100	0.4	10/10	0.18	10/20	22	0.13
	1.0	Axial(φ2.7/φ0.6)	EU02	15	-40 to +150		1.4	1.0	10	300	100	0.4	10/10	0.18	10/20	20	0.2
	1.0	Axial(φ2.7/φ0.78)	EU 2	15	-40 to +150		1.4	1.0	10	300	100	0.4	10/10	0.18	10/20	17	0.3
	1.1	Axial(φ4.0/φ0.78)	RU 2M	20	-40 to +150		1.2	1.1	10	300	100	0.4	10/10	0.18	10/20	15	0.4
	1.5	Axial(φ4.0/φ0.98)	RU 3	20	-40 to +150		1.5	1.5	10	400	100	0.4	10/10	0.18	10/20	12	0.6
	1.5	Axial(φ4.0/φ0.98)	RU 3M	50	-40 to +150		1.1	1.5	10	350	100	0.4	10/10	0.18	10/20	12	0.6
	2.0	Axial(φ5.2/φ1.2)	RU 30	200	-40 to +150		0.95	2.0	10	300	100	0.4	100/100	0.18	100/200	10	1.0
	3.0	Axial(φ5.2/φ1.2)	RU 31	150	-40 to +150		1.2	3.0	50	500	100	0.4	100/100	0.18	100/200	10	1.0
	1.5(3.0)	Axial(φ6.5/φ1.4)	RU 4	50	-40 to +150		1.5	3.0	10	300	100	0.4	10/10	0.18	10/20	8	1.2
	2.0(3.5)	Axial(φ6.5/φ1.4)	RU 4M	70	-40 to +150		1.3	3.5	10	300	100	0.4	100/100	0.18	100/200	8	1.2
	5.0	TO-220F(Center-tap)	FMU-14S, R	30	-40 to +150		1.5	2.5	50	500	100	0.4	100/100	0.18	100/200	4.0	2.1
	10	TO-220F(Center-tap)	FMU-24S, R	40	-40 to +150		1.5	5.0	50	500	100	0.4	100/100	0.18	100/200	4.0	2.1

V_{RM} (V)	I_F (AV) (A) Values in parentheses are for the products with heatsinks	Package Axial (Body Diameter/Lead Diameter)	Part Number	I_{FSM} (A) 50Hz Single Half Sine Wave	T_j (°C)	T_{stg} (°C)	V_F (V) max	I_F (A)	I_R (μA) $V_R=V_{RM}$ max	I_R(H) (μA) $V_R=V_{RM}$ max	T_a (°C)	trr① (μs)	I_F/I_{RP} (mA)	trr② (μs)	I_F/I_{RP} (mA)	Rth(j-l) Rth(j-c) (°C/W)	Mass (g)
600	0.25	Axial(φ4.0/φ0.78)	RU 1A	15	-40 to +150		2.5	0.25	10	200	100	0.4	10/10	0.18	10/20	15	0.4
	0.5	Axial(φ2.4/φ0.6)	AU01A	15	-40 to +150		1.7	0.5	10	150	100	0.4	10/10	0.18	10/20	22	0.13
	0.6	Axial(φ4.0/φ0.78)	RF 1A	15	-40 to +150		2.0	0.6	10	200	100	0.4	10/10	0.18	10/20	15	0.4
	0.6	Axial(φ2.4/φ0.6)	AS01A	20	-40 to +150		1.5	0.6	10	50	100	1.5	10/10	0.6	10/20	22	0.13
	0.6	Axial(φ4.0/φ0.78)	RH 1A	35	-40 to +150		1.3	0.6	5	70	150	4	10/10	1.3	10/20	15	0.4
	0.7	Axial(φ2.7/φ0.6)	ES01A	30	-40 to +150		2.5	0.8	10	200	100	1.5	10/10	0.6	10/20	20	0.2
	0.7	Axial(φ4.0/φ0.78)	RS 1A	30	-40 to +150		2.5	0.8	10	200	100	1.5	10/10	0.6	10/20	15	0.4
	0.8	Axial(φ2.4/φ0.6)	AU02A	25	-40 to +150		1.3	0.8	10	250	100	0.4	10/10	0.18	10/20	22	0.13
	1.0	Axial(φ2.7/φ0.6)	EU02A	15	-40 to +150		1.4	1.0	10	300	100	0.4	10/10	0.18	10/20	20	0.2
	1.0	Axial(φ2.7/φ0.78)	EU 2A	15	-40 to +150		1.4	1.0	10	300	100	0.4	10/10	0.18	10/20	17	0.3
	1.0	Axial(φ4.0/φ0.78)	RU 2	20	-40 to +150		1.5	1.0	10	300	100	0.4	10/10	0.18	10/20	15	0.4
	1.1	Axial(φ4.0/φ0.78)	RU 2AM	20	-40 to +150		1.2	1.1	10	300	100	0.4	10/10	0.18	10/20	15	0.4
	1.5	Axial(φ4.0/φ0.98)	RU 3A	20	-40 to +150		1.5	1.5	10	400	100	0.4	10/10	0.18	10/20	12	0.6
	1.5	Axial(φ4.0/φ0.78)	RU 20A	50	-40 to +150		1.1	1.5	10	350	100	0.4	10/10	0.18	10/20	15	0.4
	1.5	Axial(φ4.0/φ0.98)	RU 3AM	50	-40 to +150		1.1	1.5	10	350	100	0.4	10/10	0.18	10/20	12	0.6
	1.5(3.0)	Axial(φ6.5/φ1.4)	RU 4A	50	-40 to +150		1.5	3.0	10	300	100	0.4	10/10	0.18	10/20	8	1.2
	2.0(3.5)	Axial(φ6.5/φ1.4)	RU 4AMS	70	-40 to +150		1.3	3.5	10	300	100	0.4	100/100	0.18	100/200	8	1.2
	3.0	Axial(φ5.2/φ1.2)	RY3A	50	-40 to +150		1.15	3.0	10	1000	150(Tj)	0.2	100/100	0.1	100/200	10	1.0
	3.0	Axial(φ4.0/φ0.98)	RY2A	50	-40 to +150		1.15	3.0	10	1000	150(Tj)	0.2	100/100	0.1	100/200	12	0.6
	3.0	TO-220F2Pin	FMY-1036S	50	-40 to +150		1.15	3.0	10	1000	150	0.2	100/100	0.1	100/200	4.0	2.1
	5.0	TO-220F2Pin	FMU-G16S	30	-40 to +150		1.25	5.0	50	500	100	0.4	100/100	0.18	100/200	4.0	2.1
	5.0	TO-220F(Center-tap)	FMU-16S, R	30	-40 to +150		1.5	2.5	50	500	100	0.4	100/100	0.18	100/200	4.0	2.1
	10	TO-220F(Center-tap)	FMU-26S, R	40	-40 to +150		1.5	5.0	50	500	100	0.4	100/100	0.18	100/200	4.0	2.1
	10	TO-220F2Pin	FMU-G26S	40	-40 to +150		1.35	10	50	500	100	0.4	100/100	0.18	100/200	4.0	2.1
	10	TO-220F2Pin	FMY-1106S	180	-40 to +150		1.15	10	30	3000	150	0.2	100/100	0.1	100/200	4.0	2.1
	20	TO-220F(Center-tap)	FMY-2206S	180	-40 to +150		1.15	10	30	3000	150	0.2	100/100	0.1	100/200	4.0	2.1
800	0.25	Axial(φ4.0/φ0.78)	RU 1B	15	-40 to +150		2.5	0.25	10	200	100	0.4	10/10	0.18	10/20	15	0.4
	0.6	Axial(φ4.0/φ0.78)	RF 1B	15	-40 to +150		2.0	0.6	10	200	100	0.4	10/10	0.18	10/20	15	0.4
	0.6	Axial(φ4.0/φ0.78)	RH 1B	35	-40 to +150		1.3	0.6	5	70	150	4	10/10	1.3	10/20	15	0.4
	0.7	Axial(φ4.0/φ0.78)	RS 1B	30	-40 to +150		2.5	0.8	10	200	100	1.5	10/10	0.6	10/20	20	0.4
	1.0	Axial(φ4.0/φ0.78)	RU 2B	20	-40 to +150		1.5	1.0	10	300	100	0.4	10/10	0.18	10/20	15	0.4
	1.1	Axial(φ4.0/φ0.98)	RU 3B	20	-40 to +150		1.5	1.0	10	400	100	0.4	10/10	0.18	10/20	12	0.6
	1.5(3.0)	Axial(φ6.5/φ1.4)	RU 4B	50	-40 to +150		1.6	3.0	10	500	100	0.4	10/10	0.18	10/20	8	1.2
1000	0.2	Axial(φ4.0/φ0.78)	RU 1C	15	-40 to +150		3.0	0.25	10	200	100	0.4	10/10	0.18	10/20	15	0.4
	0.6	Axial(φ4.0/φ0.78)	RH 1C	35	-40 to +150		1.3	0.6	5	70	150	4	10/10	1.3	10/20	15	0.4
	0.8	Axial(φ4.0/φ0.78)	RU 2C	20	-40 to +150		1.5	1.0	10	300	100	0.4	10/10	0.18	10/20	15	0.4
	1.5	Axial(φ4.0/φ0.98)	RU 3C	20	-40 to +150		2.5	1.5	10	400	100	0.4	10/10	0.18	10/20	12	0.6
	1.5(2.5)	Axial(φ6.5/φ1.4)	RU 4C	50	-40 to +150		1.6	3.0	50	500	100	0.4	100/100	0.18	100/200	8	1.2
1300	1.0	Axial(φ4.0/φ0.98)	RH 2D	60	-40 to +150		1.0	1.0	10	500	100	4	10/10	1.3	100/200	12	0.6
	1.2(1.5)	Axial(φ6.5/φ1.4)	RU 4D	50	-40 to +150		1.8	1.5	50	500	100	0.4	500/500	0.18	500/1000	8	1.2
	1.5(2.5)	Axial(φ6.5/φ1.4)	RU 4DS	50	-40 to +150		1.8	3.0	50	500	100	0.4	500/500	0.18	500/1000	8	1.2
1500	0.5	Axial(φ2.7/φ0.6)	ES01F	20	-40 to +150		2.0	0.5	10	200	100	1.5	10/10	0.6	10/20	20	0.2
	0.5	Axial(φ2.7/φ0.78)	ES 1F	20	-40 to +150		2.0	0.5	10	200	100	1.5	10/10	0.6	10/20	17	0.3
	1.0	Axial(φ4.0/φ0.98)	RH 2F	60	-40 to +150		1.0	1.0	10	500	100	4	10/10	1.3	100/200	12	0.6
	2.0	Axial(φ5.2/φ1.2)	RS 3FS	50	-40 to +150		1.1	3.0	50	500	100	2	100/100	0.8	100/200	10	1.0
	2.0	Axial(φ5.2/φ1.2)	RP 3F	50	-40 to +150		1.7	2.0	50	500	100	0.7	500/500	0.3	500/1000	10	1.0
	2.5	Axial(φ5.2/φ1.2)	RH 3F	50	-40 to +150		1.3	2.5	50	500	100	4	100/100	1.3	100/200	10	1.0
	1.5(2.5)	Axial(φ6.5/φ1.4)	RS 4FS	50	-40 to +150		1.5	3.0	50	500	100	1	100/100	0.4	100/200	8	1.2
	2.5	Axial(φ6.5/φ1.4)	RH 4F	50	-40 to +150		1.5	2.5	10	350	100	4	100/100	1.3	100/200	8	1.2
	5.0	TO-220F2Pin	FMQ-G1FS	50	-40 to +150		5.0	5.0	50	500	150	0.7	500/500	0.3	500/1000	4.0	2.1
	10	TO-220F2Pin	FMQ-G2FS	50	-40 to +150		2.8	10	50	500	150(Tj)	0.5	500/500	0.2	500/1000	4.0	2.1
	10	TO-220F2Pin	FMU-G2FS	50	-40 to +150		1.6	10	50	6000	150(Tj)	0.6	500/500	0.25	500/1000	4.0	2.1
	10	TO-220F2Pin	FMQ-G2FLS	50	-40 to +150		1.8	10	50	500	150(Tj)	1.2	500/500	0.4	500/1000	4.0	2.1
	10	TO-220F2Pin	FMQ-G2FMS	50	-40 to +150		2.4	10	50	500	150	0.5	500/500	0.25	500/1000	4.0	2.1
	10	TO-3PF2Pin	FMQ-G5FMS	50	-40 to +150		2.4	10	50	500	100	0.5	500/500	0.2	500/1000	2	6.5
	10	TO-3PF2Pin	FMV-G5FS	50	-40 to +150		1.5	10	50	700	100	2.0	500/500	0.8	500/1000	2	6.5
1600	2.5	Axial(φ5.2/φ1.2)	RH 3G	50	-40 to +150		1.3	2.5	50	500	100	4	100/100	1.3	100/200	10	1.0
1700	10	TO-3PF2Pin	FMQ-G5GS	50	-40 to +150		2.7	10	100	500	100	0.5	500/500	0.2	500/1000	2	6.5
2000	0.2	Axial(φ4.0/φ0.78)	RC 2	20	-40 to +150		2.0	0.2	10	300	100	4.0	10/10	1.3	10/20	15	0.4

*Under development

4-3 Ultrafast Recovery Diodes

●Surface-Mount

V_{RM} (V)	I_F (AV) (A) Values in parentheses are for the products with heatsinks	Package	Part Number	I_{FSM} (A) 50Hz Single Half Sine Wave	T_j (°C)	T_{stg} (°C)	V_F (V) max	I_F (A)	I_R (μA) $V_R=V_{RM}$ max	I_R(H) (mA) $V_R=V_{RM}$ max	T_a (°C)	trr① (ns)	I_F/I_{RP} (mA)	trr② (ns)	I_F/I_{RP} (mA)	Rth(j-l) (°C/W)	Mass (g)
200	1.0	Surface-Mount (SJP)	SJPL-D2	25	-40 to +150		0.98	1.0	10	1	150	50	100/100	35	100/200	20	0.072
	1.5	Surface-Mount (SJP)	SJPX-F2	30	-40 to +150		0.98	1.5	10	2	150	30	100/100	25	100/200	20	0.072
	2.0	Surface-Mount (SJP)	SJPL-H2	25	-40 to +150		0.98	2.0	10	1	150	50	100/100	35	100/200	20	0.072
	3.0	Surface-Mount (D pack)	SPX-G32S	50	-40 to +150		0.98	3.0	50	10	100	30	100/100	25	100/200	5.0	0.41
	6.0	Surface-Mount (D pack)Center-tap	SPX-62S	80	-40 to +150		0.98	3.0	50	10	100	30	100/100	25	100/200	5.0	0.41
	10.0	Surface-Mount (TO220S)	MPL-102S	65	-40 to +150		0.98	5.0	100	0.2	150	40	100/100	30	100/200	2.5	1.4
300	2.0	Surface-Mount (SJP)	SJPX-H3	20	-40 to +150		1.3	2.0	50	3	150	30	100/100	25	100/200	20	0.072
400	1.5	Surface-Mount(SJP)	SJPL-F4	25	-40 to +150		1.3	1.5	10	0.05	150	50	100/100	35	100/200	20	0.072
	3.0	Surface-Mount(SJP)	SJPL-L4	30	-40 to +150		1.3	3.0	10	0.05	150	50	100/100	35	100/200	20	0.072
500	1.0	Surface-Mount(SJP)	SJPD-D5	20	-40 to +150		1.4	1.0	10	0.1	150(Tj)	40	100/100	30	100/200	20	0.072
	3.0	Surface-Mount(SJP)	SJPD-L5	50	-40 to +150		1.4	3.0	15	0.15	150(Tj)	50	100/100	35	100/200	20	0.072
600	2.0	Surface-Mount (SJP)	SJPL-H6	30	-40 to +150		1.5	2.0	50	0.1	150	50	100/100	35	100/200	20	0.072
	2.0	Surface-Mount (SJP)	SJPX-H6	20	-40 to +150		1.5	2.0	10	3	150	30	100/100	20	100/200	20	0.072
	3.0	Surface-Mount (TO220S)	MPL-1036S	50	-40 to +150		1.75	3.0	50	0.1	150	50	100/100	–	–	2.5	1.4

●Thru-Hole

V_{RM} (V)	I_F (AV) (A) Values in parentheses are for the products with heatsinks	Package Axial (Body Diameter/Lead Diameter)	Part Number	I_{FSM} (A) 50Hz Single Half Sine Wave	T_j (°C)	T_{stg} (°C)	V_F (V) max	I_F (A)	I_R (μA) $V_R=V_{RM}$ max	I_R(H) (mA) $V_R=V_{RM}$ max	T_a (°C)	trr① (ns)	I_F/I_{RP} (mA)	trr② (ns)	I_F/I_{RP} (mA)	Rth(j-l) (°C/W)	Mass (g)
200	1.0	Axial(φ2.4/φ0.6)	AL01Z	25	−40 to +150		0.98	1.0	100	0.5	100	50	100/100	35	100/200	22	0.13
	1.0	Axial(φ2.7/φ0.6)	EN 01Z	50	−40 to +150		0.92	1.0	10	2	150(Tj)	100	100/100	50	100/200	20	0.2
	1.5	Axial(φ2.7/φ0.78)	EL 1Z	20	−40 to +150		0.98	1.5	100	0.5	100	100	100/100	50	100/200	17	0.3
	1.5	Axial(φ2.7/φ0.6)	EL02Z	25	−40 to +150		0.98	1.5	50	0.1	100	40	100/100	30	100/200	20	0.2
	1.5	Axial(φ4.0/φ0.78)	RN 1Z	60	−40 to +150		0.92	1.5	20	3	150(Tj)	100	100/100	50	100/200	15	0.4
	2.0	Axial(φ4.0/φ0.78)	RX 10Z	30	−40 to +150		0.98	2.0	50	3	150(Tj)	30	100/100	25	100/200	15	0.4
	2.0	Axial(φ4.0/φ0.78)	RL 10Z	30	−40 to +150		0.98	2.0	50	0.1	100	50	100/100	35	100/200	15	0.4
	2.0	Axial(φ4.0/φ0.98)	RL 2Z	30	−40 to +150		0.98	2.0	100	0.5	100	50	100/100	35	100/200	12	0.6
	2.0	Axial(φ4.0/φ0.98)	RN 2Z	70	−40 to +150		0.92	2.0	50	4	150(Tj)	100	100/100	50	100/200	12	0.6
	3.0	Axial(φ5.2/φ1.2)	RX 3Z	80	−40 to +150		0.98	3.0	50	10	100	30	100/100	25	100/200	10	1.0
	3.0	Axial(φ5.2/φ1.2)	RN 3Z	80	−40 to +150		0.92	3.0	50	6	150(Tj)	100	100/100	50	100/200	10	1.0
	3.5	Axial(φ5.2/φ1.2)	RL 3Z	80	−40 to +150		0.95	3.5	50	0.2	100	50	100/100	35	100/200	10	1.0
	3.5	Axial(φ6.5/φ1.4)	RL 4Z	80	−40 to +150		0.95	3.5	150	0.5	100	50	100/100	35	100/200	8	1.2
	3.5	Axial(φ6.5/φ1.4)	RN 4Z	120	−40 to +150		0.92	3.5	50	6	150(Tj)	100	100/100	50	100/200	8	1.2
	5.0	TO-220F(Center-tap)	FML-12S	35	−40 to +150		0.98	2.5	50	0.1	150(Tj)	40	100/100	30	100/200	4.0	2.1
	5.0	TO-220F(Center-tap)	FMX-12S	35	−40 to +150		0.98	2.5	50	10	100	30	100/100	25	100/200	4.0	2.1
	5.0	TO-220F2Pin	FML-G12S	65	−40 to +150		0.98	5.0	250	1	100	40	100/100	30	100/200	4.0	2.1
	5.0	TO-220F2Pin	FMX-G12S	65	−40 to +150		0.98	5.0	100	20	100	30	100/100	25	100/200	4.0	2.1
	5.0	TO-220F2Pin	FMN-G12S	100	−40 to +150		0.92	5.0	100	10	150	100	100/100	50	100/200	4.0	2.1
	10.0	TO-220F(Center-tap)	FMXA-2102ST	100	−40 to +150		1.2	5.0	100	20	150(Tj)	25	500/500	—	—	4.0	2.1
	10.0	TO-220F(Center-tap)	FML-22S	65	−40 to +150		0.98	5.0	250	1	100	40	100/100	30	100/200	4.0	2.1
	10.0	TO-220F(Center-tap)	FMX-22S	65	−40 to +150		0.98	5.0	100	20	100	30	100/100	25	100/200	4.0	2.1
	10.0	TO-220F2Pin	FML-G22S	150	−40 to +150		0.98	10.0	500	2	100	40	500/500	30	500/1000	4.0	2.1
	10.0	TO-220F2Pin	FMX-G22S	150	−40 to +150		0.98	10.0	200	50	100	30	500/500	25	500/1000	4.0	2.1
	15.0	TO-220F(Center-tap)	FMX-22SL	100	−40 to +150		0.98	7.5	150	30	100	30	500/500	25	500/1000	4.0	2.1
	20.0	TO-220F(Center-tap)	FM2-2202	110	−40 to +150		0.98	10.0	200	0.4	150(Tj)	50	100/100	35	100/200	4.0	2.1
	20.0	TO-220F(Center-tap)	FMXA-2202S	100	−40 to +150		1.2	10.0	100	30	150	25	500/500	—	—	4.0	2.1
	20.0	TO-3PF(Center-tap)	FML-4202S	150	−40 to +150		0.98	10.0	10	0.4	150	40	500/500	30	500/1000	2.0	6.5
	20.0	TO-3PF(Center-tap)	FMX-4202S	150	−40 to +150		0.98	10.0	200	50	150	30	500/500	25	500/1000	2.0	6.5
	20.0	TO-3PF(Center-tap)	FMXA-4202S	100	−40 to +150		1.2	10.0	100	30	150(Tj)	25	500/500	—	—	2.0	6.5
300	5.0	TO-220F(Center-tap)	FML-13S	40	−40 to +150		1.3	2.5	50	0.1	100	50	100/100	35	100/200	4.0	2.1
	5.0	TO-220F2Pin	FML-G13S	70	−40 to +150		1.3	5.0	100	0.2	100	50	100/100	35	100/200	4.0	2.1
	10.0	TO-220F(Center-tap)	FML-23S	70	−40 to +150		1.3	5.0	100	0.5	100	50	100/100	35	100/200	4.0	2.1
	10.0	TO-220F(Center-tap)	FMX-23S	65	−40 to +150		1.3	5.0	50	15	150	30	100/100	25	100/200	4.0	2.1
	15.0	TO-220F(Center-tap)	FMXA-2153S	75	−40 to +150		1.3	7.5	75	23	150(Tj)	25	500/500	—	—	4.0	2.1
	20.0	TO-220F(Center-tap)	FMX-2203	100	−40 to +150		1.3	10.0	100	30	150	30	500/500	25	500/1000	4.0	2.1
	20.0	TO-3PF(Center-tap)	FMX-4203S	100	−40 to +150		1.3	10.0	100	30	150	30	500/500	25	500/1000	2.0	6.5
	20.0	TO-220F(Center-tap)	FMXA-2203S	100	−40 to +150		1.3	10.0	100	30	150	25	500/500	—	—	4.0	2.1
	20.0	TO-3PF(Center-tap)	FMXA-4203S	100	−40 to +150		1.3	10.0	100	30	150(Tj)	25	500/500	—	—	2.0	6.5

V_{RM} (V)	I_F (AV) (A) Values in parentheses are for the products with heatsinks	Package Axial (Body Diameter/Lead Diameter)	Part Number	I_{FSM} (A) 50Hz Single Half Sine Wave	T_j (°C)	T_{stg} (°C)	V_F (V) max	I_F (A)	I_R (μA) $V_R=V_{RM}$ max	I_R(H) (mA) $V_R=V_{RM}$ max	T_a (°C)	trr① (ns)	I_F/I_{RP} (mA)	trr② (ns)	I_F/I_{RP} (mA)	Rth(j-l) (°C/W)	Mass (g)
400	0.7	Axial (φ2.4/φ0.6)	AG01	15	−40 to +150		1.8	0.7	100	0.5	100	100	100/100	50	100/200	22	0.13
	0.7	Axial (φ2.7/φ0.6)	EG01	15	−40 to +150		2.0	0.7	50	0.3	100	100	100/100	50	100/200	20	0.2
	0.8	Axial (φ2.7/φ0.78)	EG 1	15	−40 to +150		1.8	0.8	50	0.3	100	100	100/100	50	100/200	17	0.3
	1.0	Axial (φ2.4/φ0.6)	AL01	20	−40 to +150		1.4	1.0	10	0.5	150(Tj)	50	100/100	35	100/200	22	0.13
	1.2	Axial (φ4.0/φ0.78)	RG 10	50	−40 to +150		1.8	1.5	500	2.5	100	100	100/100	50	100/200	15	0.4
	1.2	Axial (φ4.0/φ0.98)	RG 2	50	−40 to +150		1.8	1.5	500	2.5	100	100	100/100	50	100/200	12	0.6
	1.5	Axial (φ2.7/φ0.78)	EL 1	20	−40 to +150		1.3	1.5	10	0.05	100	100	100/100	50	100/200	17	0.3
	2.0	Axial (φ4.0/φ0.98)	RL 2	40	−40 to +150		1.3	2.0	10	0.1	150(Tj)	50	100/100	35	100/200	12	0.6
	1.0 (3.0)	Axial (φ6.5/φ1.4)	RG4S	80	−40 to +150		1.8	3.0	500	2.5	100	100	100/100	50	100/200	8	1.2
	3.5	Axial (φ5.2/φ1.2)	RL 3	80	−40 to +150		1.3	3.5	100	0.2	150(Tj)	50	100/100	35	100/200	10	1.0
	5.0	TO-220F2Pin	FMXA-1054S	50	−40 to +150		1.5	5.0	50	15	150	20	500/500	—	—	4.0	2.1
	5.0	TO-220F (Center-tap)	FMG-14S, R	35	−40 to +150		2.0	2.5	500	1.5	100	100	100/100	50	100/200	4.0	2.1
	5.0	TO-220F (Center-tap)	FML-14S	40	−40 to +150		1.3	2.5	50	0.1	100	50	100/100	35	100/200	4.0	2.1
	5.0	TO-220F2Pin	FMX-G14S	70	−40 to +150		1.3	5.0	50	15	150	30	100/100	25	100/200	4.0	2.1
	5.0	TO-220F2Pin	FML-G14S	70	−40 to +150		1.3	5.0	100	0.2	100	50	100/100	35	100/200	4.0	2.1
	5.0	TO-220F2Pin	FMN-G14S	70	−40 to +150		1.0	5.0	50	10	150(Tj)	100	100/100	50	100/200	4.0	2.1
	8.0	TO-220F (Center-tap)	FMG-24S, R	65	−40 to +150		2.0	5.0	500	2.5	100	100	100/100	50	100/200	4.0	2.1
	10.0	TO-220F (Center-tap)	FML-24S	70	−40 to +150		1.3	5.0	100	0.2	100	50	100/100	35	100/200	4.0	2.1
	10.0	TO-220F2Pin	FMXA-1104S	100	−40 to +150		1.5	10.0	100	30	150(Tj)	25	500/500	—	—	4.0	2.1
	16.0	TO-220F (Center-tap)	FMXJ-2164S	100	−40 to +150		1.4	8.0	100	20	150(Tj)	18	500/500	—	—	4.0	2.1
	20.0	TO-3PF (Center-tap)	FML-4204S	100	−40 to +150		1.3	10.0	50	0.4	150	50	500/500	35	500/1000	2.0	6.5
	20.0	TO-3PF (Center-tap)	FMXA-4204S*	100	−40 to +150		1.5	10	100	30	150(Tj)	25	500/500	—	—	2.0	6.5
	20.0	TO-3PF (Center-tap)	FMD-4204S	100	−40 to +150		1.4	10	20	0.2	150(Tj)	50	500/500	25	500/1000	2.0	6.5
500	1.0	Axial (φ4.0/φ0.78)	RD1105*	20	−40 to +150		1.4	1.0	10	0.1	150(Tj)	40	100/100	30	100/200	12.0	0.4
	3.0	Axial (φ5.2/φ1.2)	RD3305	50	−40 to +150		1.4	3.0	15	0.15	150(Tj)	50	100/100	35	100/200	10.0	1.0
600	0.5	Axial (φ2.7/φ0.6)	EG01A	10	−40 to +150		2.0	0.5	100	0.5	100	100	100/100	50	100/200	20	0.2
	0.5	Axial (φ2.4/φ0.6)	AG01A	15	−40 to +150		1.8	0.5	100	0.5	100	100	100/100	50	100/200	22	0.13
	0.6	Axial (φ2.7/φ0.78)	EG 1A	10	−40 to +150		2.0	0.6	100	0.5	100	100	100/100	50	100/200	17	0.3
	1.0	Axial (φ4.0/φ0.78)	RG 10A	50	−40 to +150		2.0	1.0	500	2.5	100	100	100/100	50	100/200	15	0.4
	1.0	Axial (φ4.0/φ0.98)	RG 2A	50	−40 to +150		2.0	1.0	500	2.5	100	100	100/100	50	100/200	12	0.6
	1.2	Axial (φ4.0/φ0.98)	RD 2A	30	−40 to +150		1.55	1.2	50	0.1	150(Tj)	50	100/100	35	100/200	12	0.6
	2.0	Axial (φ5.2/φ1.2)	RL 3A	60	−40 to +150		1.7	3.0	50	0.2	150(Tj)	50	100/100	35	100/200	10	1.0
	1.0 (2.0)	Axial (φ6.5/φ1.4)	RG 4AS	50	−40 to +150		2.0	2.0	500	2.5	100	100	100/100	50	100/200	8	1.2
	3.0	TO-220F (Two elements)	FMC-26U	50	−40 to +150		2.0	3.0	500	3	150(Tj)	70	500/500	35	500/1000	4.0	2.1
	3.0	Axial (φ6.5/φ1.4)	RL 4A	80	−40 to +150		1.5	3.0	50	0.1	150(Tj)	50	500/500	35	500/1000	8	1.2
	3.0	Axial (φ6.5/φ1.4)	RN4A	50	−40 to +150		1.3	3.0	50	5	150(Tj)	100	100/100	50	100/200	8.0	1.2
	4.0	TO-220F2Pin	FMG-G26S	50	−40 to +150		2.5	4.0	500	3	100	100	100/100	50	100/200	4.0	2.1
	5.0	TO-220F2Pin	FMX-G16S	50	−40 to +150		1.5	5.0	50	15	150	30	100/100	25	100/200	4.0	2.1
	5.0	TO-220F2Pin	FML-G16S	50	−40 to +150		1.5	5.0	100	0.5	100	50	500/500	35	500/1000	4.0	2.1
	5.0	TO-220F2Pin	FMN-G16S	50	−40 to +150		1.2	5.0	50	10	150(Tj)	100	100/100	50	100/200	4.0	2.1
	5.0	TO-220F2Pin	FMN-1056S	60	−40 to +150		1.3	5.0	50	5.0	150	100	100/100	50	100/200	4.0	2.1
	5.0	TO-220F2Pin	FMD-1056S	90	−40 to +150		1.7	5.0	10	0.1	150	50	500/500	35	500/1000	4.0	2.1
	6.0	TO-220F (Center-tap)	FMG-26S, R	50	−40 to +150		2.2	3.0	500	3	100	100	100/100	50	100/200	4.0	2.1
	8.0	TO-220F2Pin	FMXK-1086S	100	−40 to +150		1.75	8	30	6.0	150	27	500/500	—	—	4.0	2.1
	10.0	TO-220F2Pin	FMX-G26S	100	−40 to +150		1.5	10.0	100	20	150	30	100/100	25	100/200	4.0	2.1
	10.0	TO-220F2Pin	FMD-G26S	100	−40 to +150		1.7	10.0	100	0.3	100	50	500/500	30	500/1000	4.0	2.1
	10.0	TO-220F2Pin	FMXA-1106S	100	−40 to +150		1.98	10.0	100	30	150(Tj)	28	500/500	—	—	4.0	2.1
	10.0	TO-220F2Pin	FMNS-1106S	100	−40 to +150		1.3	10	100	10	150	100	100/100	50	100/200	4.0	2.1
	10.0	TO-220F2Pin	FMN-1106S	150	−40 to +150		1.3	10	100	10	150	100	100/100	50	100/200	4.0	2.1
	10.0	TO-220F2Pin	FMD-1106S	180	−40 to +150		1.7	10	20	0.2	150	50	500/500	35	500/1000	4.0	2.1
	10.0	TO-220F2Pin	FMXK-1106S	100	−40 to +150		1.75	10	100	10	150	27	500/500	—	—	4.0	2.1
	20.0	TO-220F (Center-tap)	FMN-2206S	150	−40 to +150		1.3	10	100	10	150	100	100/100	50	100/200	4.0	2.1
	20.0	TO-220F (Center-tap)	FMXK-2206S	100	−40 to +150		1.75	10	100	10	150	27	500/500	—	—	4.0	2.1
	20.0	TO-3PF (Center-tap)	FMD-4206S	100	−40 to +150		1.7	10.0	100	0.3	150	50	500/500	30	500/1000	2.0	6.5
	20.0	TO-3PF (Center-tap)	FMX-4206S*	100	−40 to +150		1.5	10	100	20	150(Tj)	30	500/500	25	500/1000	2.0	6.5
	20.0	TO-3PF (Center-tap)	FMXA-4206S*	100	−40 to +150		1.98	10	100	30	150(Tj)	28	500/500	—	—	2.0	6.5
	20.0	TO-3PF (Center-tap)	FMN-4206S	150	−40 to +150		1.3	10	100	10	150(Tj)	100	100/100	50	100/200	2.0	6.5

*Under development

V_{RM} (V)	I_F (AV) (A) Values in parentheses are for the products with heatsinks	Package Axial (Body Diameter/Lead Diameter)	Part Number	I_{FSM} (A) 50Hz Single Half Sine Wave	T_j (°C)	T_{stg} (°C)	V_F (V) max	I_F (A)	I_R (μA) $V_R=V_{RM}$ max	I_R(H) (mA) $V_R=V_{RM}$ max	T_a (°C)	trr① (ns)	I_F/I_{RP} (mA)	trr② (ns)	I_F/I_{RP} (mA)	Rth(j-l) (°C/W)	Mass (g)
800	0.5	Axial (φ2.4/φ0.6)	AB01B	10	−40 to +150		2.0	0.5	10	0.2	150 (Tj)	200	100/100	80	100/200	22	0.13
	3.0	TO-220F (Two elements)	FMC-28U	50	−40 to +150		3.0	3.0	100	0.5	150 (Tj)	70	500/500	35	500/1000	4.0	2.1
	3.0	TO-220F2Pin	FMC-G28S	50	−40 to +150		3.0	3.0	100	1	150 (Tj)	70	500/500	35	500/1000	4.0	2.1
	5.0	TO-220F2Pin	FMC-G28SL	60	−40 to +150		3.0	5.0	200	2	150 (Tj)	70	500/500	35	500/1000	4.0	2.1
1000	0.2	Axial (φ2.4/φ0.6)	AP01C	5	−40 to +150		4.0	0.2	100	0.5	100	200	100/100	80	100/200	22	0.13
	0.2	Axial (φ2.7/φ0.6)	EP01C	5	−40 to +150		4.0	0.2	5	0.05	100	200	100/100	80	100/200	20	0.2
	0.4	Axial (φ4.0/φ0.78)	RU 1P	10	−40 to +150		4.0	0.4	5	0.05	100	100	100/100	50	100/200	15	0.4
	0.5	Axial (φ2.7/φ0.6)	EG01C	10	−40 to +150		3.3	0.5	50	0.5	100	100	100/100	50	100/200	20	0.2
	0.7	Axial (φ4.0/φ0.78)	RG 1C	10	−40 to +150		3.3	0.7	20	0.25	100	100	100/100	50	100/200	15	0.4
	1.0 (2.0)	Axial (φ6.5/φ1.4)	RG 4C	60	−40 to +150		3.0	2.0	500	2.5	100	100	500/500	50	500/1000	8	1.2
	4.0	TO-220F2Pin	FMG-G2CS	30	−40 to +150		4.0	4.0	50	0.3	100	100	500/500	50	500/1000	4.0	2.1
1200	3.0	TO-220F2Pin (Two elements)	FMC-26UA	50	−40 to +150		4.0	3.0	500	3	150 (Tj)	70	500/500	35	500/1000	4.0	2.1
1600	3.0	TO-220F2Pin (Two elements)	FMC-28UA	50	−40 to +150		6.0	3.0	100	0.5	150 (Tj)	70	500/500	35	500/1000	4.0	2.1
2000	0.1	Axial (φ4.0/φ0.78)	RP 1H	5	−40 to +150		7.0	0.1	2	0.01	100	100	10/20	50	10/20	15	0.4

4-4 Schottky Barrier Diodes

Standard

●Surface-Mount

V_{RM} (V)	I_F (AV) (A)	Package	Part Number	I_{FSM} (A) 50Hz Single Half Sine Wave	T_j (°C)	T_{stg} (°C)	V_F (V) max	I_F (A)	I_R (mA) $V_R=V_{RM}$ max	$I_R(H)$ (mA) $V_R=V_{RM}$ max	T_a (°C)	Rth(j-l) Rth(j-c) (°C/W)	Mass (g)
40	1.0	Surface-Mount (SJP)	SJPB-D4	30	-40 to +150		0.55	1.0	0.1	35	150	20	0.072
	2.0	Surface-Mount (SJP)	SJPB-H4	50	-40 to +150		0.55	2.0	0.2	70	150	20	0.072
	3.0	Surface-Mount (SJP)	SJPB-L4	60	-40 to +150		0.55	3.0	0.3	100	150	20	0.072
	3.0	Surface-Mount (D pack)	SPB-G34S	50	-40 to +150		0.55	3.0	3.5	100	150	5	0.29
	5.0	Surface-Mount (D pack)	SPB-G54S	60	-40 to +150		0.55	5.0	5	175	150	5	0.29
	6.0	Surface-Mount (D pack)Center-tap	SPB-64S	50	-40 to +150		0.55	3.0	3.5	100	150	5	0.29
60	1.0	Surface-Mount (SJP)	SJPB-D6	20	-40 to +150		0.70	1.0	0.1	30	150	20	0.072
	1.5	Surface-Mount (SJP)	SJPW-F6	25	-40 to +150		0.70	1.5	1.0	70	150	20	0.072
	2.0	Surface-Mount (SJP)	SJPB-H6	40	-40 to +150		0.69	2.0	0.2	55	150	20	0.072
	3.0	Surface-Mount (SJP)	SJPB-L6	50	-40 to +150		0.70	3.0	0.3	70	150	20	0.072
	5.0	Surface-Mount (D pack)	SPB-G56S	60	-40 to +150		0.70	5.0	3	125	150	5	0.29
90	1.0	Surface-Mount (SJP)	SJPB-D9	20	-40 to +150		0.85	1.0	0.1	30	150	20	0.072
	2.0	Surface-Mount (SJP)	SJPB-H9	40	-40 to +150		0.85	2.0	0.2	55	150	20	0.072
100	20	Surface-Mount (TO220S)Center-tap	MPE-220A	120	-40 to +150		0.85	10.0	1	100	150	2.5	1.04

●Thru-Hole

V_{RM} (V)	I_F (AV) (A)	Package Axial (Body Diameter/Lead Diameter)	Part Number	I_{FSM} (A) 50Hz Single Half Sine Wave	T_j (°C)	T_{stg} (°C)	V_F (V) max	I_F (A)	I_R (mA) $V_R=V_{RM}$ max	$I_R(H)$ (mA) $V_R=V_{RM}$ max	T_a (°C)	Rth(j-l) Rth(j-c) (°C/W)	Mass (g)
40	1.0	Axial(φ2.4/φ0.6)	AK 04	25	-40 to +150		0.55	1.0	1	35	150	22	0.13
	1.0	Axial(φ2.7/φ0.6)	EK 04	40	-40 to +150		0.55	1.0	5	35	150	20	0.3
	1.5	Axial(φ2.7/φ0.78)	EK 14	40	-40 to +150		0.55	2.0	5	70	150	17	0.3
	1.7	Axial(φ4.0/φ0.78)	RK 14	60	-40 to +150		0.55	2.0	5	70	150	15	0.45
	2.5	Axial(φ4.0/φ0.98)	RK 34	50	-40 to +150		0.55	2.5	5	100	150	12	0.6
	3.0	TO-220F2Pin	FMB-G14	60	-40 to +150		0.55	3.0	5	100	150	4	2.1
	3.0	Axial(φ6.5/φ1.4)	RK 44	80	-40 to +150		0.55	3.0	5	100	150	8	1.2
	4.0	TO-220F(Center-tap)	FMB-24	50	-40 to +150		0.55	2.0	5	250	150	4	2.1
	5.0	Axial(φ6.5/φ1.4)	RW54	120	-40 to +150		0.55	5.0	1	150	150(Tj)	8	1.2
	5.0	TO-220F2Pin	FMB-G14L	60	-40 to +150		0.55	5.0	5	175	150	4	2.1
	6.0	TO-220F(Center-tap)	FMB-24M	60	-40 to +150		0.55	3.0	5	100	150	4	2.1
	10	TO-220F(Center-tap)	FMB-24L	60	-40 to +150		0.55	5.0	5	175	150	4	2.1
	10	TO-220F(Center-tap)	FMW-24L	100	-40 to +150		0.55	5.0	5	175	150	4	2.1
	10	TO-220F2Pin	FMB-G24H	150	-40 to +150		0.55	10.0	10	350	150	4	2.1
	15	TO-220F(Center-tap)	FMB-24H	100	-40 to +150		0.55	7.5	7.5	250	150	4	2.1
	15	TO-220F(Center-tap)	FMW-24H	120	-40 to +150		0.55	7.5	7.5	250	150	4	2.1
	20	TO-220F(Center-tap)	FMB-2204	150	-40 to +150		0.55	10	10	350	150	4	2.1
	20	TO-220F(Center-tap)	FMW-2204	150	-40 to +150		0.55	10.0	10	350	150	4	2.1
	30	TO-220F(Center-tap)	FMB-2304	150	-40 to +150		0.55	15	15	500	150	4	2.1

V_{RM} (V)	I_F (AV) (A)	Package Axial (Body Diameter/Lead Diameter)	Part Number	I_{FSM} (A) 50Hz Single Half Sine Wave	T_j (°C)	T_{stg} (°C)	V_F (V) max	I_F (A)	I_R (mA) $V_R=V_{RM}$ max	$I_R(H)$ (mA) $V_R=V_{RM}$ max	T_a (°C)	Rth(j-l) Rth(j-c) (°C/W)	Mass (g)
60	0.7	Axial(ϕ2.4/ϕ0.6)	AK 06	10	-40 to +150		0.62	0.7	1	30	150	22	0.13
	0.7	Axial(ϕ2.7/ϕ0.6)	EK 06	10	-40 to +150		0.62	0.7	1	30	150	20	0.3
	1.5	Axial(ϕ2.7/ ϕ0.78)	EK 16	25	-40 to +150		0.62	1.5	1	55	150	17	0.3
	1.5	Axial(ϕ4.0/ ϕ0.78)	RK 16	25	-40 to +150		0.62	1.5	1	55	150	15	0.45
	2.0	Axial(ϕ4.0/ ϕ0.98)	RK 36	40	-40 to +150		0.62	2.0	2	70	150	12	0.6
	3.5	Axial(ϕ6.5/ ϕ1.4)	RK 46	70	-40 to +150		0.62	3.5	3	125	150	8	1.2
	4.0	TO-220F(Center-tap)	FMB-26	40	-40 to +150		0.62	2.0	1	55	150	4	2.1
	6.0	TO-220F2Pin	FMB-G16L	50	-40 to +150		0.62	5.0	5	175	150	4	2.1
	10	TO-220F(Center-tap)	FMW-2106	100	-40 to +150		0.7	5.0	3	125	150	4	2.1
	15	TO-220F(Center-tap)	FMW-2156	100	-40 to +150		0.7	7.5	5	175	150	4	2.1
	20	TO-220F(Center-tap)	FMW-2206	120	-40 to +150		0.7	10.0	1	250	150	4	2.1
	30	TO-220F(Center-tap)	FMB-2306	150	-40 to +150		0.7	15	8	400	150	4	2.1
	30	TO-3PF(Center-tap)	FMW-4306	150	-40 to +150		0.7	15	3	350	150	2	6.5
90	0.7	Axial(ϕ2.4/ϕ0.6)	AK 09	10	-40 to +150		0.81	0.7	1	30	150	22	0.13
	0.7	Axial(ϕ2.7/ϕ0.6)	EK 09	10	-40 to +150		0.81	0.7	1	30	150	20	0.3
	1.5	Axial(ϕ2.7/ϕ0.78)	EK 19	40	-40 to +150		0.81	1.5	2	55	150	17	0.3
	1.5	Axial(ϕ4.0/ϕ0.78)	RK 19	40	-40 to +150		0.81	1.5	2	55	150	15	0.45
	2.0	Axial(ϕ4.0/ϕ0.98)	RK 39	50	-40 to +150		0.81	2.0	3	70	150	12	0.6
	3.5	Axial(ϕ6.5/ ϕ1.4)	RK 49	60	-40 to +150		0.81	3.5	5	125	150	8	1.2
	4.0	TO-220F(Center-tap)	FMB-29	50	-40 to +150		0.81	2.0	3	70	150	4	2.1
	4.0	TO-220F2Pin	FMB-G19L	60	-40 to +150		0.81	4.0	5	125	150	4	2.1
	8.0	TO-220F(Center-tap)	FMB-29L	60	-40 to +150		0.81	4.0	5	125	150	4	2.1

Low VF "A Series"

●Surface-Mount

V_{RM} (V)	I_F (AV) (A)	Package	Part Number	I_{FSM} (A) 50Hz Single Half Sine Wave	T_j (°C)	T_{stg} (°C)	V_F (V) max	I_F (A)	I_R (mA) $V_R=V_{RM}$ max	$I_R(H)$ (mA) $V_R=V_{RM}$ max	T_a (°C)	Rth(j-l) Rth(j-c) (°C/W)	Mass (g)
30	1.0	Surface-Mount (SJP)	SJPA-D3	30	-40 to +125		0.36	1.0	1.5	70	100	20	0.072
	2.0	Surface-Mount (SJP)	SJPA-H3*	40	-40 to +125		0.36	2.0	3.0	140	100	20	0.072
	3.0	Surface-Mount (SJP)	SJPA-L3	50	-40 to +125		0.36	3.0	4.5	210	100	20	0.072

*Under development

●Thru-Hole

V_{RM} (V)	I_F (AV) (A)	Package Axial (Body Diameter/Lead Diameter)	Part Number	I_{FSM} (A) 50Hz Single Half Sine Wave	T_j (°C)	T_{stg} (°C)	V_F (V) max	I_F (A)	I_R (mA) $V_R=V_{RM}$ max	$I_R(H)$ (mA) $V_R=V_{RM}$ max	T_a (°C)	Rth(j-l) Rth(j-c) (°C/W)	Mass (g)
30	2.0	Axial(ϕ4.0/ϕ0.78)	RA 13	40	-40 to +125		0.36	2.0	3.0	140	100	15	0.45

Low IR "E Series"

●Surface-Mount

V_{RM} (V)	I_F (AV) (A)	Package Axial (Body Diameter/Lead Diameter)	Part Number	I_{FSM} (A) 50Hz Single Half Sine Wave	T_j (°C)	T_{stg} (°C)	V_F (V) max	I_F (A)	I_R (mA) $V_R=V_{RM}$ max	$I_R(H)$ (mA) $V_R=V_{RM}$ max	T_a (°C)	Rth(j-l) Rth(j-c) (°C/W)	Mass (g)
30	2.0	Surface-Mount (SJP)	SJPE-H3*	40	-40 to +150		0.55	2.0	0.2	70	150	20	0.072
40	2.0	Surface-Mount (SJP)	SJPE-H4	40	-40 to +150		0.6	2.0	0.2	70	150	20	0.072

*Under development

●Thru-Hole

V_{RM} (V)	I_F (AV) (A)	Package	Part Number	I_{FSM} (A) 50Hz Single Half Sine Wave	T_j (°C)	T_{stg} (°C)	V_F (V) max	I_F (A)	I_R (mA) $V_R=V_{RM}$ max	$I_R(H)$ (mA) $V_R=V_{RM}$ max	T_a (°C)	Rth(j-l) Rth(j-c) (°C/W)	Mass (g)
40	15	TO-220F(Center-tap)	FME-24H	100	-40 to +150		0.6	7.5	0.75	75	150	4	2.1
60	10	TO-220F(Center-tap)	FME-2106	60	-40 to +150		0.72	5.0	1	35	150	4	2.1
100	10	TO-220F(Center-tap)	FMEN-210A	100	-40 to +150		0.85	5.0	0.1	50	150(Tj)	4	2.1
	15	TO-220F(Center-tap)	FMEN-215A*	100	-40 to +150		0.85	7.5	0.15	75	150(Tj)	4	2.1
	20	TO-220F(Center-tap)	FMEN-220A	120	-40 to +150		0.85	10	0.2	100	150(Tj)	4	2.1
	20	TO-3PF(Center-tap)	FMEN-420A	120	-40 to +150		0.85	10	0.2	100	150(Tj)	2	6.5
	30	TO-220F(Center-tap)	FMEN-230A	150	-40 to +150		0.85	15	0.3	150	150(Tj)	4	2.1
	30	TO-262	MPEN-230AF	150	-40 to +150		0.90	15	0.25	125	150(Tj)	1.5	1.55
	30	TO-3PF(Center-tap)	FMEN-430A	150	-40 to +150		0.85	15	0.3	150	150	2	6.5
150	10	TO-220F(Center-tap)	FMEN-210B	100	-40 to +150		0.92	5	0.1	25	150	4	2.1
	20	TO-220F(Center-tap)	FMEN-220B	120	-40 to +150		0.92	10	0.2	50	150	4	2.1
	20	TO-3PF(Center-tap)	FMEN-420B	120	-40 to +150		0.92	10	0.2	50	150(Tj)	2	6.5
	30	TO-220F(Center-tap)	FMEN-230B	150	-40 to +150		0.92	15	0.3	75	150	4	2.1

*Under development

Low VF/Low IR Balance "J Series"

●Surface-Mount

V_{RM} (V)	I_F (AV) (A)	Package	Part Number	I_{FSM} (A) 50Hz Single Half Sine Wave	T_j (°C)	T_{stg} (°C)	V_F (V) max	I_F (A)	I_R (mA) $V_R=V_{RM}$ max	$I_R(H)$ (mA) $V_R=V_{RM}$ max	T_a (°C)	Rth(j-l) Rth(j-c) (°C/W)	Mass (g)
30	1.0	Surface-Mount (SJP)	SJPJ-D3	30	-40 to +150		0.45	1.0	0.1	35	150	20	0.072
	2.0	Surface-Mount (SJP)	SJPJ-H3*	40	-40 to +150		0.45	2.0	0.2	70	150	20	0.072
	3.0	Surface-Mount (SJP)	SJPJ-L3	50	-40 to +150		0.45	3.0	0.3	100	150	20	0.072

*Under development

●Thru-Hole

V_{RM} (V)	I_F (AV) (A)	Package Axial (Body Diameter/Lead Diameter)	Part Number	I_{FSM} (A) 50Hz Single Half Sine Wave	T_j (°C)	T_{stg} (°C)	V_F (V) max	I_F (A)	I_R (mA) $V_R=V_{RM}$ max	$I_R(H)$ (mA) $V_R=V_{RM}$ max	T_a (°C)	Rth(j-l) Rth(j-c) (°C/W)	Mass (g)
30	3.0	Axial(ϕ6.5/ϕ1.4)	RJ 43	50	-40 to +150		0.45	3.0	3	100	150	8	1.2
	10	TO-220F(Center-tap)	FMJ-23L	100	-40 to +150		0.45	5.0	5	175	150	4	2.1
	30	TO-220F(Center-tap)	FMJ-2303	150	-40 to +150		0.48	15.0	15	500	150	4	2.1

4-5 High Voltage Rectifier Diodes

Category	V_{RM} (kV)	Part Nubmer	$I_{F(AV)}$ (mA)	I_{FSM} (A) 50Hz Single Half Sine Wave	T_c (°C)	T_{stg} (°C)	V_F (V) max	I_F (mA)	I_R (μA) $V_R=V_{RM}$ max	$I_R(H)$ (μA) $V_R=V_{RM}$ max	T_a (°C)	trr① (μs)	Ta=100°C	I_F/I_{RP} (mA)	Mass (g)	Package Type No.
For high frequency	6	SHV-06EN	2.0	0.5	100	-40 to +120	24	10	1	3	100	0.15	0.20	10/10	0.17	1
multilayer FBT	8	SHV-08EN	2.0	0.5	100	-40 to +120	30	10	1	3	100	0.15	0.20	10/10	0.17	

- The SHV series is being packaged in a highly compact case based on the premise of overmolding with epoxy or similar materials. Handling procedures for prevention of discharge through creepage or environmental effects such as humidity must be used.
- Taping specifications for the SHV series differ from those for general diodes (refer to page 197).

Package Type (Dimensions)

- No. 1 High Voltage Rectifier Diodes

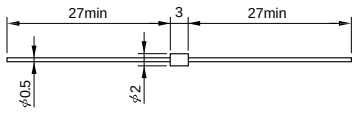

P (W)	VZ 1mA (V)	PR (W)	Package	Part Number	VDC (V)	I_{ZSM} (A)	Conditions	Tj Tstg (°C)	IR (μA) max	Mass(g)
1	28±3	50 (5ms)	Surface-Mount(SJP)	SJPZ-K28	20	–	5mA rectangular wave	-55 to +150	10	0.07
1	18.8 to 21.2	95 (500 μs)	Surface-Mount(SJP)	SJPZ-E20	15	–	–	-55 to +150	10	0.07
1	31.0 to 35.0		Surface-Mount(SJP)	SJPZ-E33	25	–	–	-55 to +150	10	0.07
2	16.8 to 19.1	500 (500 μs)	Surface-Mount(SJP)	SJPZ-N18	13	–	–	-55 to +150	10	0.07
2	25.1 to 28.9		Surface-Mount(SJP)	SJPZ-N27	20	–	–	-55 to +150	10	0.07
2	31.0 to 35.0		Surface-Mount(SJP)	SJPZ-N33	25	–	–	-55 to +150	10	0.07
2	37.8 to 42.2		Surface-Mount(SJP)	SJPZ-N40	30	–	–	-55 to +150	10	0.07
5	24 to 30	–	Surface-Mount(SZ-10)	SZ-10N27	22	70	Fig.1	-55 to +175	10	2.55
5	36 to 40	–	Surface-Mount(SZ-10)	SZ-10N40	22	40	Fig.1	-55 to +175	10	2.55
6	24 to 30	–	Surface-Mount(SZ-10)	SZ-10NN27	22	90	Fig.1	-55 to +175	10	2.55
6	36 to 40	–	Surface-Mount(SZ-10)	SZ-10NN40	22	55	Fig.1	-55 to +175	10	2.55

Figure1

I_{ZSM} Condition

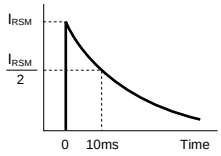

4-7 Silicon Varistors

●Symmetrical

V_F (V)	I_F (mA)	Part Number	I_F (μA) max	V_F (V)	I_{TSM} (A) 50Hz Single Half Sine Wave	T_j (°C)	T_{stg} (°C)	Rth(j-l) (°C/W)	Mass (g)	Package
1.5max	1000	VR-60SS	20	0.2	15	-40 to +100		20	0.3	Axial(φ2.7/φ0.6)
2.3±0.25	1	VR-61SS			7.5	-40 to +100		20	0.3	Axial(φ2.7/φ0.6)
2.75±0.25	10									
3.1±0.25	70									
2.0max	100	SV-3SS	50	0.6		-40 to +100		20	0.3	Axial(φ2.7/φ0.6)
1.8±0.2	1	SV-4SS	50	0.9		-40 to +100		20	0.3	Axial(φ2.7/φ0.6)
2.15±0.2	10									
2.4±0.25	30									

Part Number	VR-60SS	VR-61SS	SV-3SS	SV-4SS
Display Color				
Internal Connection	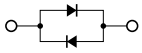	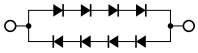	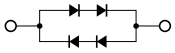	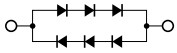

Package Type (Dimensions)

• No. 1 Surface-Mount (SJP)

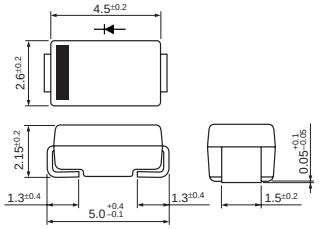

• No. 2 Surface-Mount (D pack)

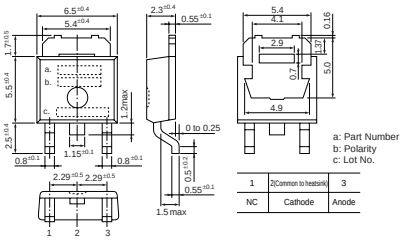

• No. 3 Surface-Mount (D pack) Center-tap

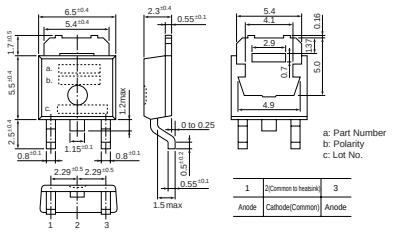

• No. 4 Surface-Mount (TO263)

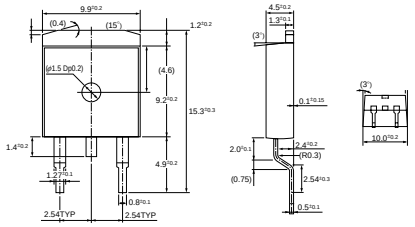

• No. 5 Surface-Mount (TO220S)

MPL-102S, MP2-202S, MPL-1036

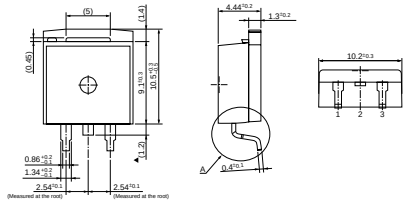

• No. 6 Surface-Mount (TO220S)

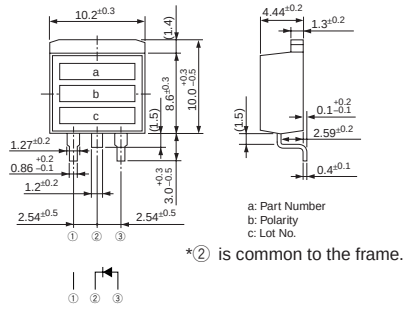

• No. 7 Surface-Mount (TO220S) Center-tap

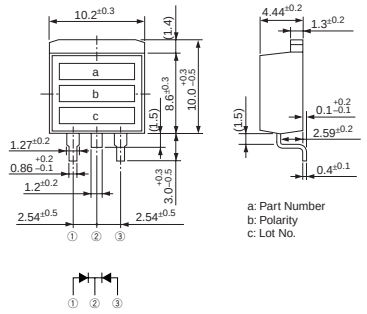

• No. 8 Surface-Mount (SZ-10)

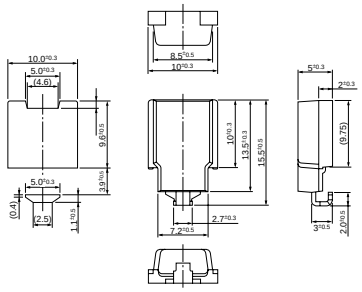

• No. 9 Axial (ϕ2.4/ϕ0.6)

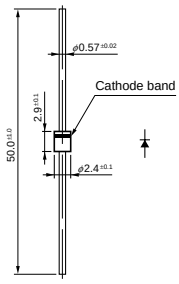

• No. 10 Axial (ϕ2.7/ϕ0.6)

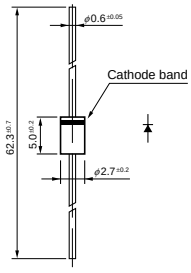

• No. 11 Axial (ϕ2.7/ϕ0.6)

Silicon Varistors (Symmetrical)

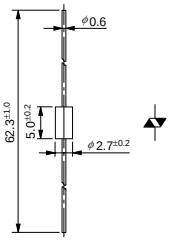

• No. 12 Axial (ϕ2.7/ϕ0.78)

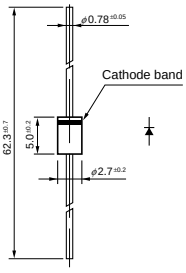

• No. 13 Axial (ϕ4.0/ϕ0.78)

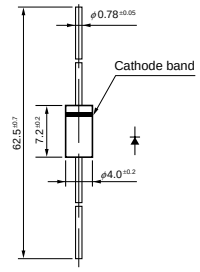

• No. 14 Axial (ϕ4.0/ϕ0.98)

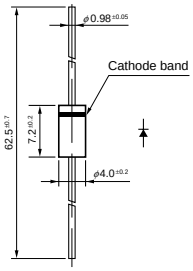

• No. 15 Axial (ϕ5.2/ϕ1.2)

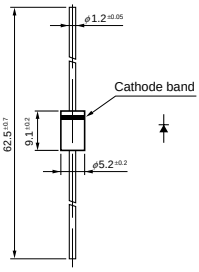

• No. 16 Axial (ϕ6.5/ϕ1.4)

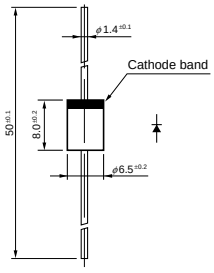

• No. 17 TO-220F (Two Elements)

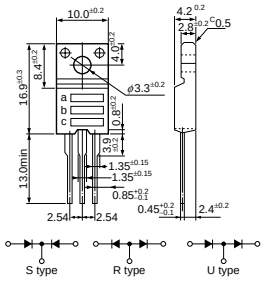

a: Part Number
b: Polarity
c: Lot No.

• No. 18 TO-220F (Center-tap)

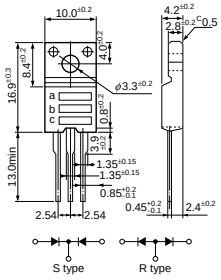

a: Part Number
b: Polarity
c: Lot No.

• No. 19 TO-220F2Pin

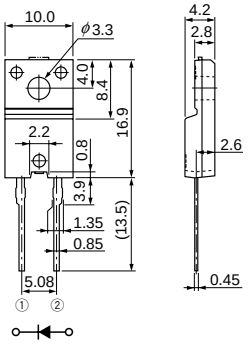

• No. 20 TO-220F2Pin (Two Elements)

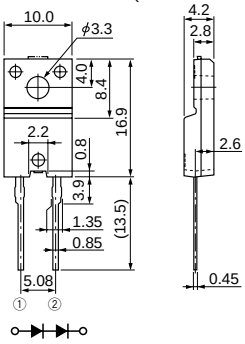

• No. 21 TO-3PF

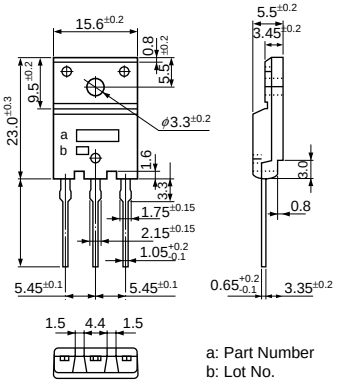

a: Part Number
b: Lot No.

• No. 22 TO-3PF2Pin

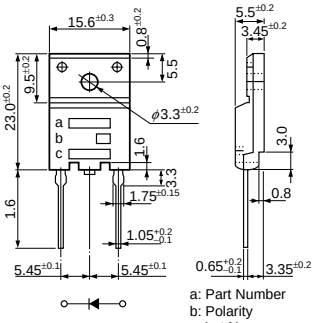

a: Part Number
b: Polarity
c: Lot No.

• No. 23 RBV-60

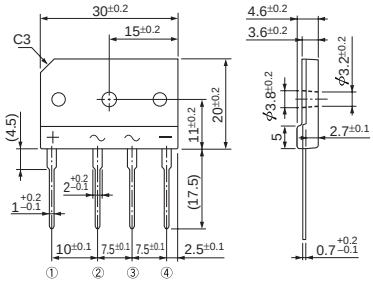

Part Number Index

Sanken Electric Co., Ltd.
Overseas Sales Headquarters
Metropolitan Plaza Building, 1-11-1 Nishi-Ikebukuro
Toshima-ku, Tokyo 171-0021, Japan
Tel: 81-3-3986-6164
Fax: 81-3-3986-8637

WORLDWIDE SALES OFFICES

Asia-Pacific

●China

Sanken Electric Hong Kong Co., Ltd.
Suite 1026 Ocean Centre, Canton Road
Tsimshatsui, Kowloon, Hong Kong
Tel: 852-2735-5262
Fax: 852-2735-5494

Sanken Electric (Shanghai) Co., Ltd.
Room 3202, Maxdo Centre, Xingyi Road 8
Changning District, Shanghai, China
Tel: 86-21-5208-1177
Fax: 86-21-5208-1757

Sanken Electric (Shanghai) Co., Ltd. Shenzhen Office
Room 1013, Xinhua Insurance Building, Mintian Road, Futian District,
Shenzhen City, Guangdong, China
Tel : 86-755-3391-9356
Fax: 86-755-3391-9368

Taiwan Sanken Electric Co., Ltd.
Room 1801, 18th Floor, 88 Jung Shiau East Road
Sec. 2, Taipei 100, Taiwan R.O.C.
Tel: 886-2-2356-8161
Fax: 886-2-2356-8261

●Korea

Sanken Electric Korea Co., Ltd.
Samsung Life Yeouido Building 16F,
23-10, Yeouido-Dong, Yeongdeungpo-gu,
Seoul 150-734, Korea
Tel: 82-2-714-3700
Fax: 82-2-3272-2145

●Singapore

Sanken Electric Singapore Pte. Ltd.
150 Beach Road, #14-03 The Gateway West
Singapore 189720
Tel: 65-6291-4755
Fax: 65-6297-1744

●Malaysia

Sanken Electric (Malaysia) Sdn. Bhd.
Block B-20-5, Level 20, Northpoint Midvalley City,
No.1, Medan Syed Putra Utara, 59200 Kuala Lumpur, Malaysia
Tel: 60-3-2282-2345
Fax: 60-3-2282-6345

Europe

●United Kingdom

Sanken Power Systems (UK) Ltd.
Pencoed Technology Park
Pencoed, Bridgend CF35 5HY, United Kingdom
Tel: 44-1656-869-100
Fax: 44-1656-869-162

North America

●United States

Allegro MicroSystems, Inc.
115 Northeast Cutoff
Worcester, Massachusetts 01606, U.S.A.
Tel: 1-508-853-5000
Fax: 1-508-853-7895

Allegro MicroSystems, Inc.
14 Hughes Street, Suite B105
Irvine, California 92618, U.S.A.
Tel: 1-949-460-2003
Fax: 1-949-460-7837

H1-O03EE0-1004015ND